MANDO specification (A)		Specification number	
		MES-A-KR-BE-002	
Division	Specification name	Designed By	MANDO
HMC / KMC	**Diagnosis on CAN specification for MGH-80 ABS/ESP**	Customer	HMC.KMC

[Contents]

1. Change
2. Scope
3. Protocol definitions
   - 3.1. Physical Layer
   - 3.2. Network Layer
   - 3.3. Timing and Initialization
4. Diagnostic management functions
   - 4.1. Diagnostic service list
   - 4.2. Error response code list
   - 4.3. StartDiagnosticSession service
   - 4.4. StopDiagnosticSession service
   - 4.5. DisableNormalMessageTransmission service
   - 4.6. EnableNormalMessageTransmission service
   - 4.7. SecurityAccess service
   - 4.8. ECUReset service
   - 4.9. ReadEcuIdentification service
   - 4.10. TesterPresent service
5. Data transmission functions
   - 5.1. ReadDataByLocalIdentification service
   - 5.2. ReadDiagnosticTroubleCodesByStatus service
   - 5.3. ClearDiagnosticInformation service
   - 5.4. WriteDataByLocalIdentifier service
6. Input output control functions
   - 6.1. InputOutputControlByLocalIdentification service (single)
   - 6.2. InputOutputControlByLocalIdentification service (multiple)
7. Remote activation of routine functions
   - 7.1. StartRoutineByLocalIdentification service
8. Diagnostic trouble codes

개정이력							
	F	2014.01.03	See Changes No.6	W.J.Jang	K.Y.KIM	C.L.Oh	C팀팀
	E	2013.10.10	See Changes No.5	W.J.Jang	K.Y.KIM	C.L.Oh	SASCO
	D	2013.05.06	See Changes No.4	W.J.Jang	K.Y.KIM	C.L.Oh	ABS품경
	C	2012.08.17	See Changes No.3	K.Y.Kim	P.K.Kang	C.L.Oh	ABS생기
	제정 기호	시행 일자	개 정 내 용	작 성	검 토	승 인	ABS 전자
관련 표준	HMC ES 95485-00(Ver 1.1) , REV. DATE : 2005.08.17)			등록확인	2012 . .		배포처

MANDO specification (B)			
Specification name	**Diagnosis on CAN specification for MGH-80ABS/ESP**	Specification number	MES-A-KR-BE-002

1. Changes

Number	date	reason	contents of changes
1	01 th.06.2012	First revision	
2	08 th.07.2012	Add service	(Page 17~18)
			Add SleepMode serive
3	08 th.07.2012	Add service	(Page 65~67)
			Delete DTC No. : C1605,C1647,C1112
			Add DTC No. : C1113,C1114
			Change DTC No. : C1628 → C1812
4	06 th.05.2013	Add service	(Page 36~38)
			Change DTC No. : C1616 → C160E
			Change DTC No. : C1807 → C1616
			Change DTC No. : C180E → C1817
5	10 th.10.2013	Edit IVSS ID	(Page 36~38) Change IVSS ID Structure
6	03 th.01.2014	Add DTC	Update DTC list Add C2229/C2243/C162A/C2222

2. Scope

This standard specification describes interchange of diagnostic information between ECUs (Electrical Control Units) and diagnostic tester via CAN communication of MGH-80 ABS/ESC systems. This document defines a part of the network layer of diagnostic communication protocol on CAN, diagnostic services and general communication specification.
This specification does not include CARB-Mode test (Emission-related diagnostic services) separately. For the CARB-Mode test, refer to the ISO 15765-5 (2002, Road vehicles – Communication between vehicle and external equipment for emissions - related diagnostics – Part 5: Emission-related diagnostic services) or SAE J1979 (2002, E/E Diagnostic Test Modes - Equivalent to ISO/DIS 15031-5:April 30,2002)

- Normative Reference -
This standard and the descriptions of diagnostic communication protocol are based on the following standards. Regarding implementation related specification which is not described in this HMC/KMC standard and other details, refer to the following standards :

ISO 11898 – 1 : 2001 Road-Vehicles – Controller Area Network (CAN) –
Part 1 : Data link layer and physical signaling
ISO 15765 – 2 : 2002 Road-Vehicles – Diagnostics on CAN -
Part 2 : Network layer services
ISO 15765 – 3 : 2002 Road-Vehicles – Diagnostics on CAN -
Part 3 : Implementation of diagnostic services
ISO 15765 – 4 : 2002 Road-Vehicles – Diagnostics on CAN -
Part 4 : Requirements for Emission related systems
SAE J1962 : 2002 OBD II Scan Tool - Equivalent to ISO 15031-4 : 2001
SAE J1978 : 2002 Diagnostic Connector
SAE J2012 : 2002 Diagnostic Trouble Code Definitions-Equivalent to ISO 15031-6 : 2002

3. Protocol definition

3.1. Physical layer

The physical layer of diagnostics on CAN shall be compliant to ISO 11898-1 and HMC/KMC ES95480-00 with the brief definitions as following table.

Parameter	Conditions
Bus Topology	Line (bus) structure
Communication Media	Twisted pair wire
Off Board DLC cable Length	Max. 5m
Data Transfer Rate	500k bps

Table 3-1. Physical layer definition

3.2. Network layer

The network layer of the external test equipment and the vehicle ECUs shall be compliant to ISO 15765-2 and ISO 15765-4, with the restrictions/additions as defined below

3.2.1. Addressing

For diagnostic communication on CAN only the normal addressing format as defined in ISO 15765-2 shall be used and only 11bit CAN identifiers shall be used.

- 11bit CAN identifiers with normal addressing only

The mapping of diagnostic address into 11 bit CAN identifiers are specified as following table.

CAN ID	Description
07DFH	Functional request CAN ID sent by the external test equipment
07D1H	Physical request CAN ID to ABS/ESC
07D9H	Physical response CAN ID from ABS/ESC

Table 3-2. Definition of CAN Identifier for diagnostic communication

3.2.2. Message structure

According to the ISO 15765-2, the 8 bytes of the CAN frame defined as follows :

N_AI	N_PCI	N_Data
Address Information (Not used)	Protocol Control Information	Databytes for Application
1 – 8 bytes data of CAN Data Field		

Table 3-3. Data bytes of CAN data field

Because address information(N_AI) is not needed in the normal addressing mode, the above 8 databytes can be defined as follows (ISO 15765-2, Normal Addressing) :

	Byte 1		Byte 2	Byte 3	Byte 4 – Byte 7	Byte 8
Single Frame	0x00	SF_DL	DATA 1	DATA 2	...	DATA 7
First Frame	0x01	FF_DL		DATA 1	...	DATA 6
Consecutive Frame	0x02	SN	DATA 1	DATA 2	...	DATA 7
Flow Control	0x03	FS	BS	STmin	N/A	

Table 3-4. Mapping of parameters and data into CAN frame – Normal Addressing

N_PCI	Description
SF_DL	- Single Frame Data Length (Lowest 4bits of Byte 1) - 1 ≤ SF_DL ≤ 7
FF_DL	- First Frame Data Length (Lowest 4bits of Byte 1 and Byte 2 = Total 12 bits) - FF_DL ≥ 8
SN	- Sequence Number (Lowest 4bits of Byte 1) - 0x01 ≤ SN ≤ 0x0F
FS	- Flow Status (Lowest 4bits of Byte 1) - See “Definitions of FS values”
BS	- Block Size - If the BS is zero(0), the transmitter (ABS/ESC ECU) will send all of the Consecutive Frame(CF) reminded.
STmin	- Minimum Separation Time (ms). - MANDO ABS/ESC system doesn’t care this value.

Table 3-5. Definition of N_PCI

The parameter value of BS and STmin is defined in section 3.3.2. (see Table 3-6)

※ Definitions of FS values (ISO 15765-2)

Hex value	Description
0	**ContinueToSend (CTS)** The FlowControl ContinueToSend parameter shall be encoded by setting the lower nibble of the N_PCI byte #1 to “0”. It shall cause the sender to resume the sending of Consecutive frames. The meaning of this value is that the receiver is ready to receive a maximum of BS number of Consecutive frames.
1	**Wait (WT)** The FlowControl Wait parameter shall be encoded by setting the lower nibble of the N_PCI byte #1 to “1”. It shall cause the sender to continue to wait for a new FlowControl N_PDU and to restart its N_BS timer.
2	**Overflow (OVFLW)** The FlowControl Overflow parameter shall be encoded by setting the lower nibble of the N_PCI byte #1 to ”2”. t shall cause the sender to abort the transmission of a segmented message and make an N_USData.confirm service call with the parameter <N_Result>=N_BUFFER_OVFLW. This N_PCI FlowStatus parameter value is only allowed to be transmitted in the FlowControl N_PDU that follows the FirstFrame N_PDU and shall only be used in case the message length FF_DL of the received FirstFrame N_PDU exceeds the buffer size of the receiving entity
3 ~ F	**Reserved** This range of values is reserved.

Figure 1 shows the usage of message frames in Table 4 and respective CAN identifiers

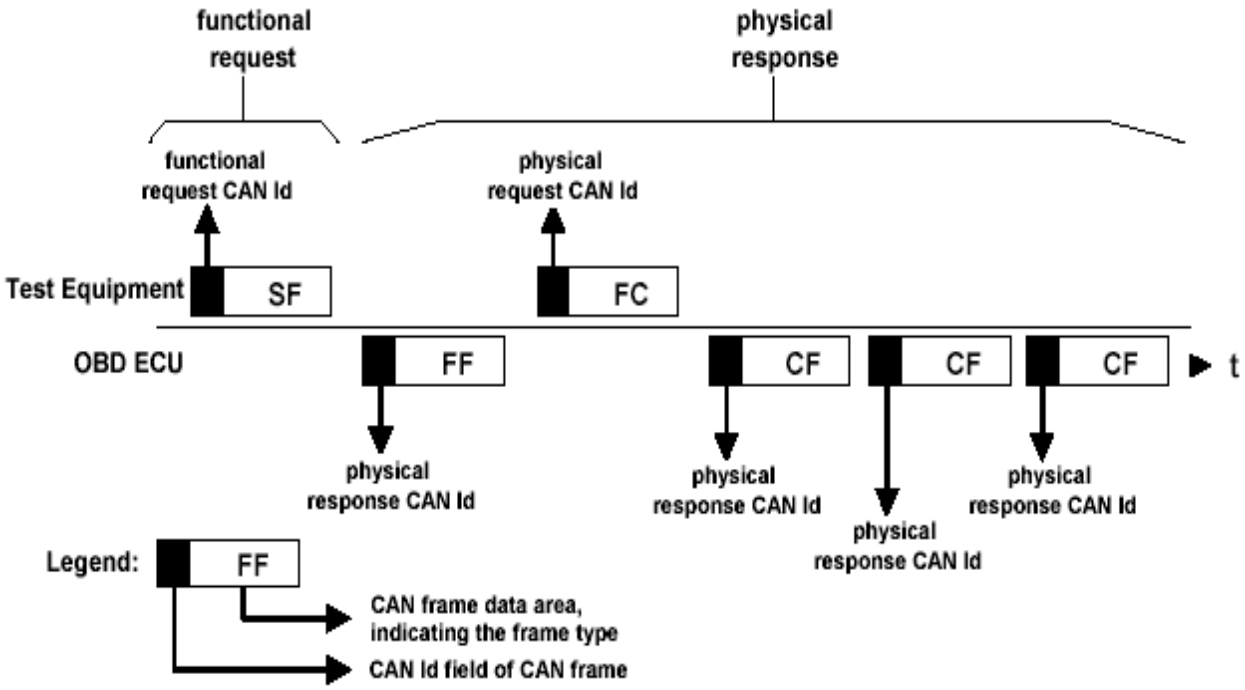

Figure 3-1. Usage of message frames and CAN identifier

3.3. Timing and initialization

3.3.1. Initialization

No separate initialization is required for diagnostic communication on CAN.

The communication can be started by giving the request for any service (either functional request or physical request). After power on, the server (ECU) will be in default session.

The diagnosis session is terminated after $S3_{SERVER}$ timeout expires or the session is terminated by a StopDiagnositcSession service.

3.3.2. Timing

The diagnostic communication on CAN uses two kinds of timing parameters

- Network layer timing parameters and
- Application layer timing parameters
- Network layer timing parameters

The following figure shows the CAN message frame flow and timing parameters in the network layer.

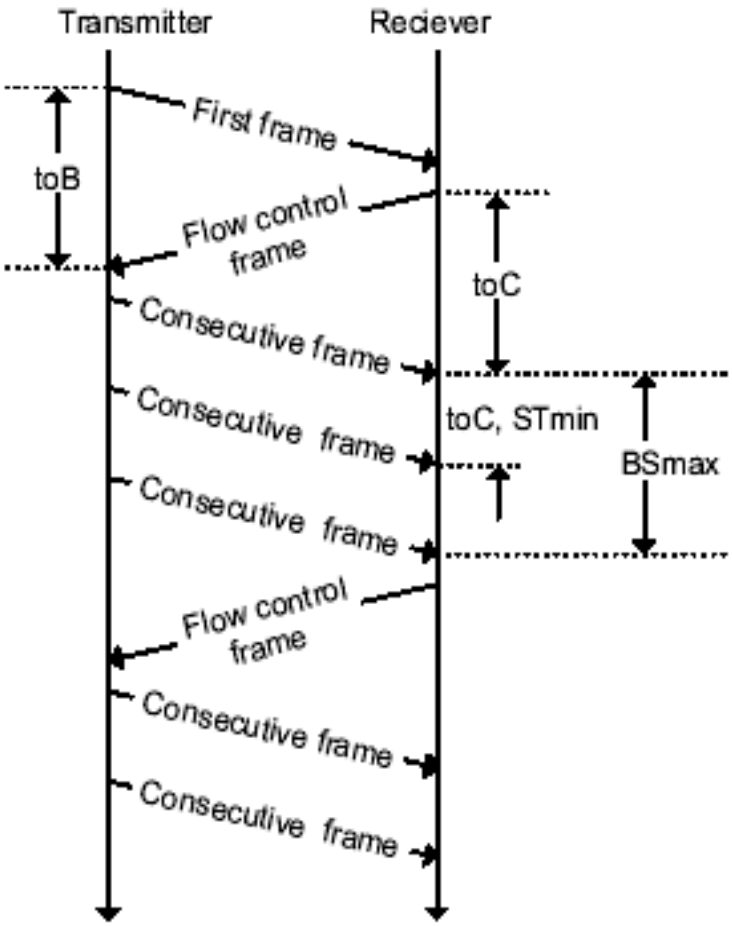

Figure 3-2. Message frames flow diagram

The timing parameters of Figure 3-2 and each descriptions are defined in the following table respectively.

Parameter	Description	Value
toB	Timeout until transmission / reception of the next Flow Control message	100ms
toC	Timeout until transmission / reception of next Consecutive Frame	100ms
STmin	The minimum time the sender shall wait between transmission of two Consecutive Frames	10 ± 2ms C1)
BSmax	The maximum number of Consecutive Frames the receiver allows the sender before waiting for a Flow Control message	-

Table 3-6. Network layer parameters

***. C1 : The MANDO ABS/ESC system doesn't care the STmin value of the Flow Control Frame. STmin is 10 ± 2ms.

- Application layer timing parameters

The following figure shows the diagnostic application message flow and timing parameters in the application layer based on ISO 15765-3.

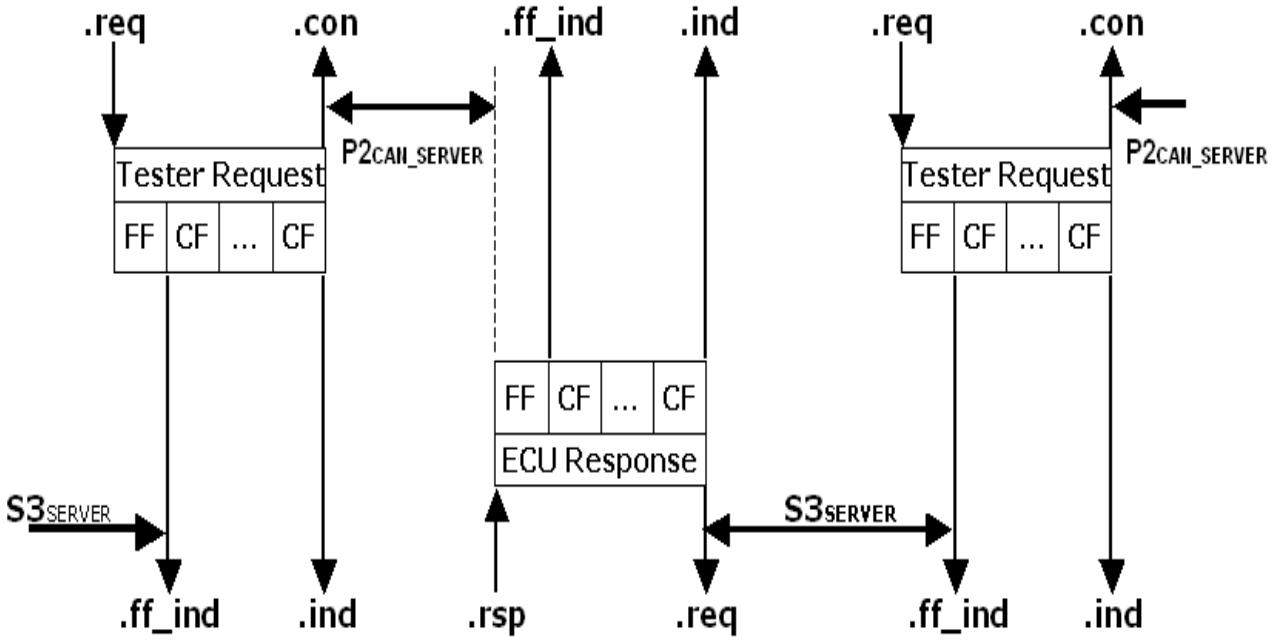

Figure 3-3. Application layer message flow diagram (based on ISO 15765-3)

The interval timing parameters (**$P2_{CAN_SERVER}$** and **$S3_{SERVER}$**) and each descriptions are defined in the following table. The **$P2_{CAN_SERVER}$** parameter is related to performance of a server and **$S3_{SERVER}$** parameter is related to the timeout of a diagnostic session.

Parameter	Description	Min	Max
$P2_{CAN_SERVER}$	Performance requirement for the server to start with the response message after the reception of a request message.	0	50 ms
$P2^*_{CAN_SERVER}$	Performance requirement for the server to start with the response message after the transmission of a negative response message with response code 0x78	0	5000 ms
$S3_{SERVER}$	Time for the server to keep a diagnostic session other than the default Session active while not receiving any diagnostic request message.	N/A	Reprogram Session : 60s Extended Session : 5s

Table 3-7. Application layer timing parameters

4. Diagnostic management functions

4.1. Diagnostic service list

Every ECU should support diagnostic services listed below.

Diagnostic Service Name	Mnemonic	Req. SID	Diagnostic Modes			Remark
			Std. Diag. Mode	ECU Prog. Mode	Ext. Diag. Mode	
			81h	85h	90h	
StartDiagnosticSession	**STDS**	10h	◆	◆	◆	
StopDiagnosticSession	**SPDS**	20h	◆	◆	◆	
TesterPresent	**TP**	3Eh		◆	◆	
SecurityAccess	**SA**	27h	◆	◆	◆	
ECUReset	ER	11h		◇	◆	
ReadECU ID	**REI**	1Ah	◆	◆	◆	
DisableNormalMessageTx	**DNMT**	28h		◆	◆	
EnableNormalMessageTx	**ENMT**	29h		◆	◆	
ReadDataByLocal ID	**RDBLI**	21h	◆	◆	◆	
ReadDTCByStatus	**RDTCBS**	18h	◆		◆	
ClearDiagnosticInformation	**CDI**	14h	◆		◆	
WriteDataByLocalID	**WDBLI**	3Bh	◆		◆	
InputOutputControlByLocalId.	**IOCBLI**	30h			○	See service description
StartRoutineByLocalID	**STRBLI**	31h	◆		◆	

Table 4-1. Diagnostic Service List

◆ Function possible in the selected Diag.Mode without security access

◇ Function possible in the selected Diag.Mode with security access level 1

○ Specific sub-function possible in the selected diag.Mode
(See each function description)

4.2. Error response code list

When an ECU detects any error condition on communication or have internal problem, it cannot respond or react to the request normally. In this case the ECU should respond to tester with negative response code described in below table:

Hex Value	Response Code	Mnemonic
10	GeneralReject *)	GR
11	ServiceNotSupported *)	SNS
12	SubFunctionNotSupported-invalidFormat	SFNS_IF
21	busy-repeatRequest	B_RR
22	conditionsNotCorrect /requestSequenceError	CNCORSE
23	RoutineNotComplete	RNC
31	RequestOutOfRange	ROOR
33	securityAccessDenied/Required *)	SAD
35	InvalidKey	IK
36	ExceedNumberOfAttempts	ENOA
37	RequiredTimeDelayNotExpired	RTDNE
40	DownloadNotAccepted	DNA
41	ImproperDownloadType	IDT
42	can'tDownloadToSpecifiedAddress	CNDTSA
43	can'tDownloadNumberOfBytesRequested	CNDNOBR
50	UploadNotAccepted	UNA
51	ImproperUploadType	IUT
52	can'tUploadFromSpecifiedAddress	CNUFSA
53	can'tUploadNumberOfBytesRequested	CNUNOBR
71	TransferSuspended	TS
72	TransferAborted	TA
74	IllegalAddressInBlockTransfer	IAIB
75	IllegalByteCountInBlockTransfer	IBCIBT
76	IllegalBlockTransferType	IBTT
78	requestCorrectlyReceived-ResponsePending *)	RCRRP
79	IncorrectByteCountDuringBlockTransfer	IBCDBT
80	ServiceNotSupportedInActiveDiagnosticMode *)	SNSIADM

Table 4-2. Negative response code list

*) These codes are general negative response codes. The occurrence depends on the system configuration

4.3. StartDiagnosticSession service

4.3.1. StartDiagnosticSession request

Data byte	Parameter name	Hex value	Mnemonic
#1d	StartDiagnosticSession request service ID	#10h	STDS
#2d	DiagnosticMode= [StandardDiagnosticMode ECUProgrammingMode ExtendedDiagnosticMode]	#XXh= [#81h #85h #90h]	DCM

Table 4-3. StartDiagnosticSession request message

Whenever the service STDS (StartDiagnosticSession) is called successfully (that includes also calling STDS with the currently active DCM), the SecurityAccess rights and the timing parameters will be initialized again.

Initialized Timing Parameters in STDS :

Timing Parameter	Description
$P2_{CAN_SERVER_MAX}$	Maximum performance requirement for the server to start with the response message after the reception of a request message
$P2^*_{CAN_SERVER_MAX}$	Maximum performance requirement for the server to start with the response message after the transmission of a negative response code 78h
$S3_{CAN_SERVER_MAX}$	Maximum time for the server to keep a diagnostic session other than the default session active while receiving any diagnostic message

If the StartDiagnosticSession request is used without the parameter DiagnosticMode,
it will be answered by the negative response IncorrectByteCountDuringBlockTransfer and the currently DiagnosticMode will stay active.

The following conditions must be satisfied to enable diagnostic communication.

- The ECU has been switched ON for more than 300msec.
- The ECU detects no ABS/EBD/TCS/ESC control condition.
- Supply voltage is above approx. 8 volts.
- The wheel velocities are below 10kph. (ExtendedDiagnosticMode, ECUProgramingMode)

MANDO specification (B)

Specification name	**Diagnosis on CAN specification for MGH-80ABS/ESP**	Specification number	MES-A-KR-BE-002

In ExtendedDiagnosticMode or ECUProgramingMode, the following conditions should be cautioned.

- In case of the ABS ECU , the ECU switches on ABS/EBD warning lamps.
- In case of the ESC ECU , the ECU switches on ABS/EBD/ESC OFF warning lamps..
- ABS, EBD, TCS and ESC controls are not executed during the diagnostic mode.
- After ExtendedDiagnosticMode or ECUProgramingMode entrance, the diagnostic mode is able to continue and in case of ExtendedDiagnosticMode, the actuate solenoid valve & pump motor at all of velocity range.

When the server transitions from any diagnostic session other than the default session to the DefaultSession,
the states of the disableNoramlMessageTransmission and enableNormalMessageTransmission services shall be reset, which means that normal communication shall be re-enabled at the point in time the session is switched to the defaultSession.
The transition occurs in the below cases :

- StartDiagnosticSession service (#10h #81h)
- ECUReset service (#11h #01h)
- StopDiagnosticSession service (#20h)
- $S3_{SERVER}$ Timeout

4.3.2. StartDiagnosticSession positive response

Data byte	Parameter name	Hex value	Mnemonic
#1d	StartDiagnosticSession positive response service ID	#50h	STDSPR
#2d	DiagnosticMode= [StandardDiagnosticMode ECUProgramming ExtendedDiagnosticMode]	#XXh= [#81h #85h #90h]	DCM

Table 4-4. StartDiagnosticSession positive response message

4.3.3. StartDiagnosticSession negative response

Data byte	Parameter name	Hex value	Mnemonic
#1d	NegativeResponse service ID	#7Fh	NR
#2d	StartDiagnosticSession request service ID	#10h	STDS
#3d	ResponseCode= [SubFunctionNotSupported-invalidFormat ConditionsNotCorrected]	#XXh= [#12h #22h]	RC

Table 4-5. StartDiagnosticSession negative response message

NegativeResponseCode	Cause of occurrence
SubFunctionNotSupported-invalidFormat	Selected DiagnosticMode is not supported
ConditionsNotCorrected	In the case of entering ExtenededMode or ProgrammingMode, Max Wheel Speed ≥ 10kph

4.3.4. Message flow of diagnostic session

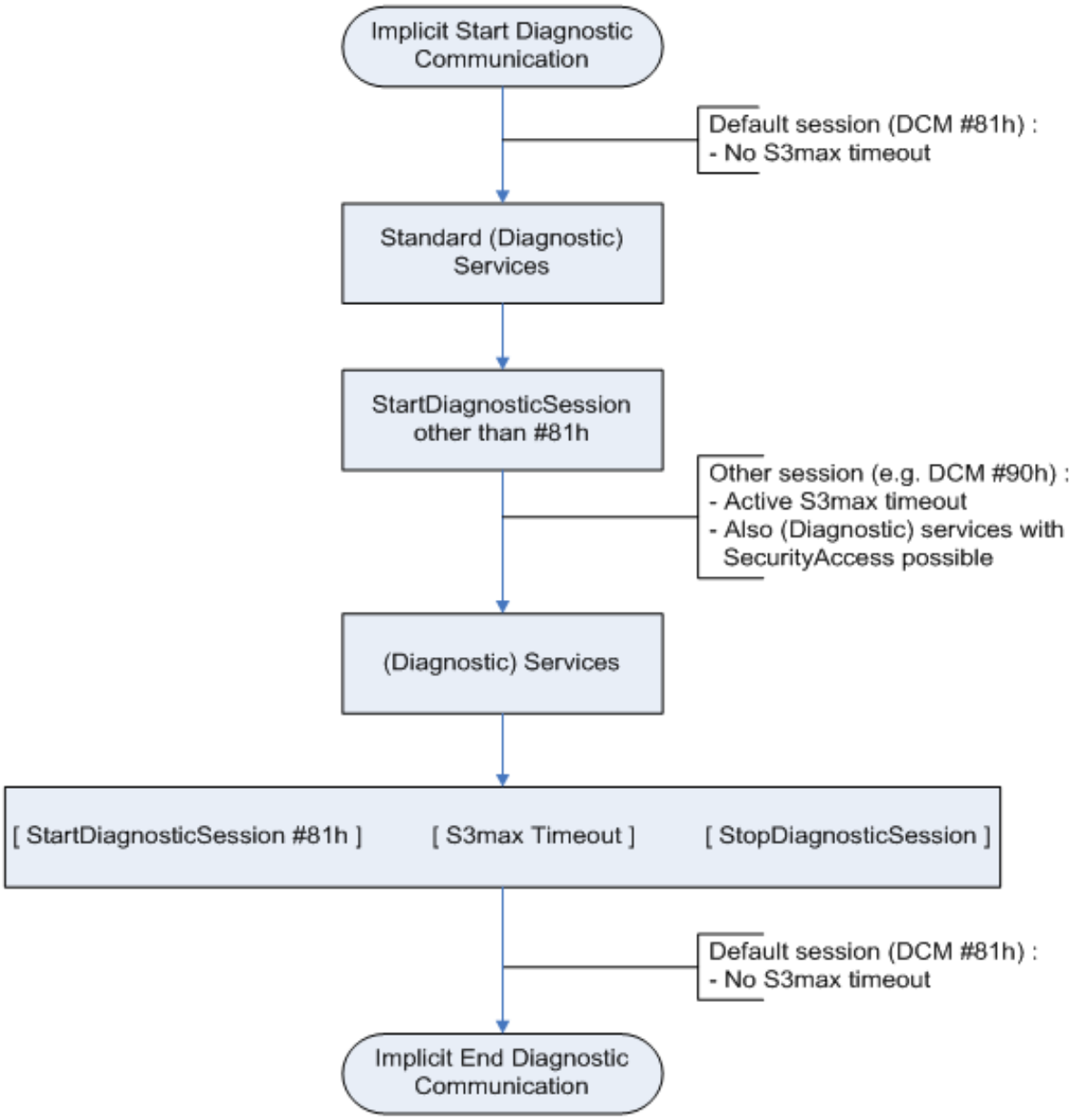

Figure 4-1. Message flow diagram

4.3.5. SleepMode request

Data byte	Parameter name	Hex value	Mnemonic
#1d	StartDiagnosticSession request service ID	#10h	STDS
#2d	DiagnosticMode= [Quiescent-Current Diagnositc-Mode Start Sleep Mode Start Request]	#XXh= [#D0h #D1h]	DCM

SleepMode request message

Service Characteristic

1. This positive response is not transmitted for this service.
2. In the case of a vehicle project not supporting this service, the any response(positive or negative) will be NOT transmitted.
3. Quiescent-Current Diagnositc-Mode Start (#D0h) should be operated in the IGN ON cycle. Otherwise(IGN OFF cycle), the negative response (#22h) will be transmitted.
4. Sleep Mode Start Request (#D1h) should be operated in the IGN OFF cycle. Otherwise(IGN ON cycle), the negative response (#22h) will be transmitted.
5. Quiescent-Current Diagnositc-Mode Start (#D0h) should be operated prior to operate Sleep Mode Start Request (#D1h). Otherwise, the negative response (#22h) will be transmitted.
6. Service operation sequence
   (1) IGN ON
   (2) Quiescent-Current Diagnositc-Mode Start (#10h #D0h)
   (3) IGN OFF
   (4) Sleep Mode Start Request ((#10h #D1h)
   (5) After 5s, ECU shutdown
7. the server transitions the default session in the following cases.
   (1) StartDiagnosticSession service (#10h #81h)
   (2) ECUReset service (#11h #01h)
   (3) StopDiagnosticSession service (#20h)
   (4) $S3_{SERVER}$ Timeout
   (5) IGN OFF, ON or Power-Up reset

4.3.6. SleepMode negative response

Data byte	Parameter name	Hex value	Mnemonic
#1d	NegativeResponse service ID	#7Fh	NR
#2d	StartDiagnosticSession request service ID	#10h	STDS
#3d	ResponseCode= [ConditionsNotCorrected]	#XXh= [#22h]	RC

SleepMode negative response message

NegativeResponseCode	Cause of occurrence
ConditionsNotCorrected	1) In IGN OFF cycle, #D0h is operated 2) In IGN ON cycle, #D1h is operated 3) #D1h is operated without #D0h prior operating.

4.4. StopDiagnosticSession service

4.4.1. StopDiagnosticSession request

Data byte	Parameter name	Hex value	Mnemonic
#1d	StopDiagnosticSession request service ID	#20h	SPDS

Table 4-6. StopDiagnosticSession request message

4.4.2 StopDiagnosticSession positive response

Data byte	Parameter name	Hex value	Mnemonic
#1d	StopDiagnosticSession positive response service ID	#60h	SPDSPR

Table 4-7. StopDiagnosticSession positive response message

After positive response, the following conditions will be found :

- Standard Diagnostic Session (DCM #81h) is active
- Default timing of the Standard Diagnostic Session is active
- Security Access is (re)initialized

4.4.3 StopDiagnosticSession negative response

Data byte	Parameter name	Hex value	Mnemonic
#1d	NegativeResponse service ID	#7Fh	NR
#2d	stopDiagnosticSessionRequest Service Id	#20h	SPDS
#3d	ResponseCode= [GeneralReject (Programming session is running – Reprogramming routine is not completed yet.)]	#XXh= [#10h]	RC

Table 4-8. StopDiagnosticSession negative response message

4.5. DisableNormalMessageTransmission service

The DisableNormalMessageTransmission service shall be used by a client to stop the normal (non- diagnostic) message transmission from the vehicle server(s).

The DisableNormalMessageTransmission request message can be used with both physical and functional addressing to stop the message transmission from an individual server or a group of servers. The server(s) being addressed shall respond with a positive response message if the ResponseRequired option is set (#01h) and it is possible to disable the normal message transmission. The server(s) being addressed shall respond with a negative response message, if it is not possible to disable the normal message transmission.

4.5.1.DisableNormalMessageTransmission service request

Data byte	Parameter name	Hex value	Mnemonic
#1d	DisableNormalMessageTransmission request service ID	#28h	DNMT
#2d	ResponseRequired= [ResponseRequired NoResponseRequired]	#XXh [#01h #02h]	

Table 4-9. DisableNormalMessageTransmission request message

4.5.2. DisableNormalMessageTransmission positive response

Data byte	Parameter name	Hex value	Mnemonic
#1d	DisableNormalMessageTransmission service positive response service ID	#68h	DNMTPR

Table 4-10. DisableNormalMessageTransmission positive response message

4.5.3 DisableNormalMessageTransmission negative response

Data byte	Parameter Name	Hex value	Mnemonic
#1d	NegativeResponse service ID	#7Fh	NR
#2d	DisableNormalMessageTransmission request service ID	#28h	DNMT
#3d	ResponseCode= [ConditionsNotCorrect]	#XXh= [#22h]	RC

Table 4-11. DisableNormalMessageTransmission negative response message

NegativeResponseCode	Cause of occurrence
ConditionsNotCorrect	Wrong DiagnosticService length or not supported LID

4.6. EnableNormalMessageTransmission service

This service is used to enable the normal (non diagnostic) message transmission i.e., to resume the activities which are cancelled by successful DisableNormalMessageTransmission request (SID #28h).
The EnableNormalMessageTransmission request message shall be used to indicate the server that normal transmission shall be resumed.
The service is used in combination with the DisableNormalMessageTransmission service to once again start the normal message transmission from the server.
The EnableNormalMessageTransmission request message can be used with both physical and functional addressing to resume normal message transmission from an individual server or a group of servers.

The server(s) being addressed shall respond with a negative response message, if it is not possible to enable the normal message transmission.
The server(s) shall return positive response message, if the request was called with the parameter ResponseRequired (#01h) and it is able to enable the normal message transmission.
The server(s) shall not return positive response, if the request was called with the parameter NoResponseRequired (#02h).

4.6.1. EnableNormalMessageTransmission service request

Data byte	Parameter name	Hex value	Mnemonic
#1d	EnableNormalMessageTransmission request service ID	#29h	ENMT
#2d	ResponseRequired= [ResponseRequired NoResponseRequired]	#XXh [#01h #02h]	

Table 4-12. EnableNormalMessageTransmission request message

4.6.2. EnableNormalMessageTransmission service positive response

Data byte	Parameter name	Hex value	Mnemonic
#1d	EnableNormalMessageTransmission service positive response service ID	#69h	ENMTPR

Table 4-13. EnableNormalMessageTransmission positive response message

4.6.3. EnableNormalMessageTransmission service negative response

Data byte	Parameter Name	Hex Value	Mnemonic
#1d	NegativeResponse service ID	#7Fh	NR
#2d	EnableNormalMessageTransmission request service ID	#29h	ENMT
#3d	ResponseCode= [ConditionsNotCorrect]	#XXh= [#22h]	RC

Table 4-14. EnableNormalMessageTransmission negative response message

NegativeResponseCode	Cause of occurrence
ConditionsNotCorrect	Wrong DiagnosticService length or not supported LID

4.7. SecurityAccess service

Some services can be accessed, only if a login procedure has been performed before the services. The ECU supports several different levels of security. The SecurityAccess service consists of two steps of access procedure.

-- Step #1 : Tester requests the “Seed”
ECU sends the “Seed”

-- Step #2 : Tester sends the “Key” (appropriate for the Seed received)
ECU responds that the “Key” was valid and will unlock itself
(if the “Key” is correct)

After two false attempts of security access by the tester, the ECU is locked for 10 seconds.
It is also locked for 10 seconds after an ignition key off to ignition key on transition or Reset.

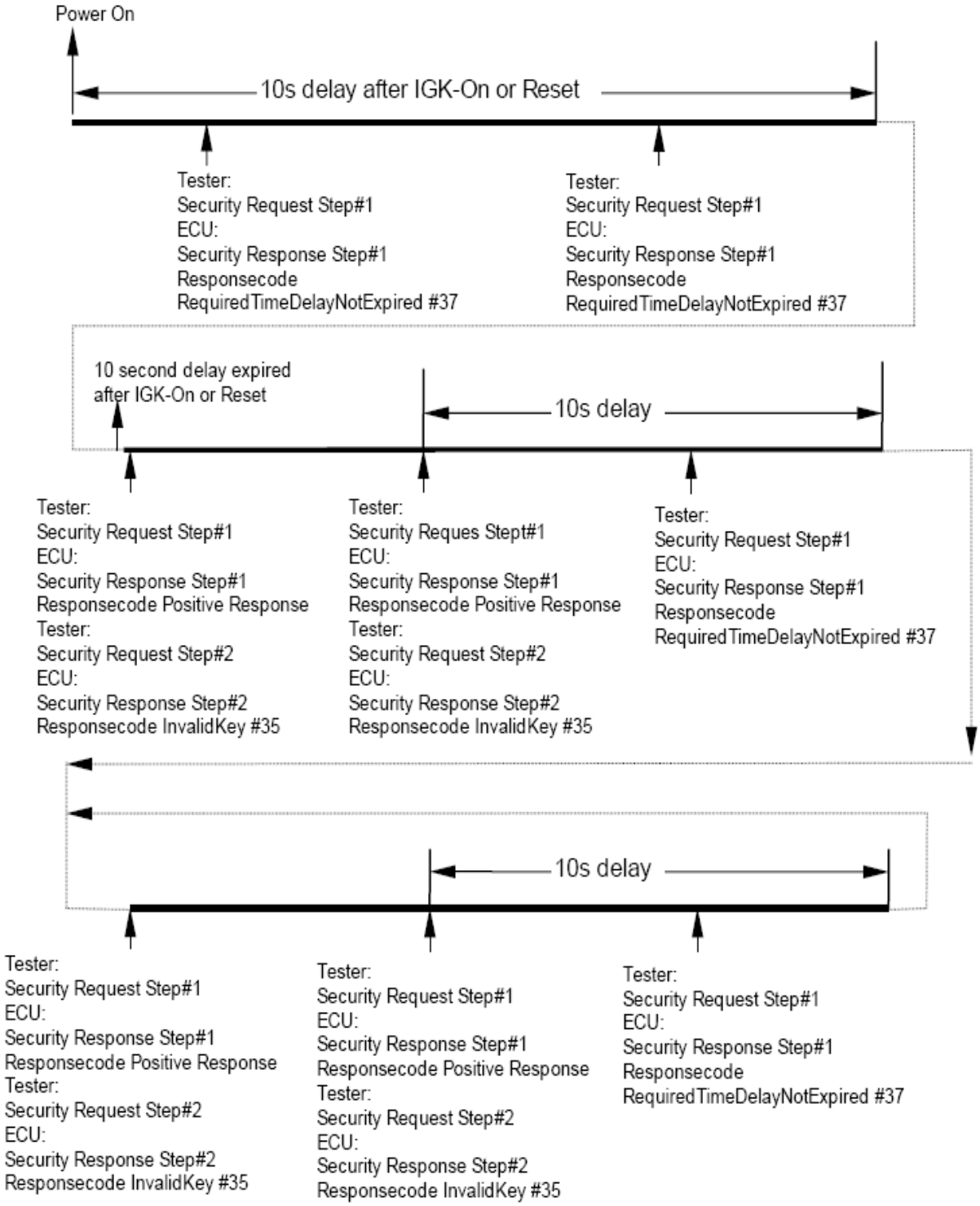

Figure 4-2. Example of SecurityAccess service procedure (false attempt)

4.7.1. Procedure of SecurityAccess

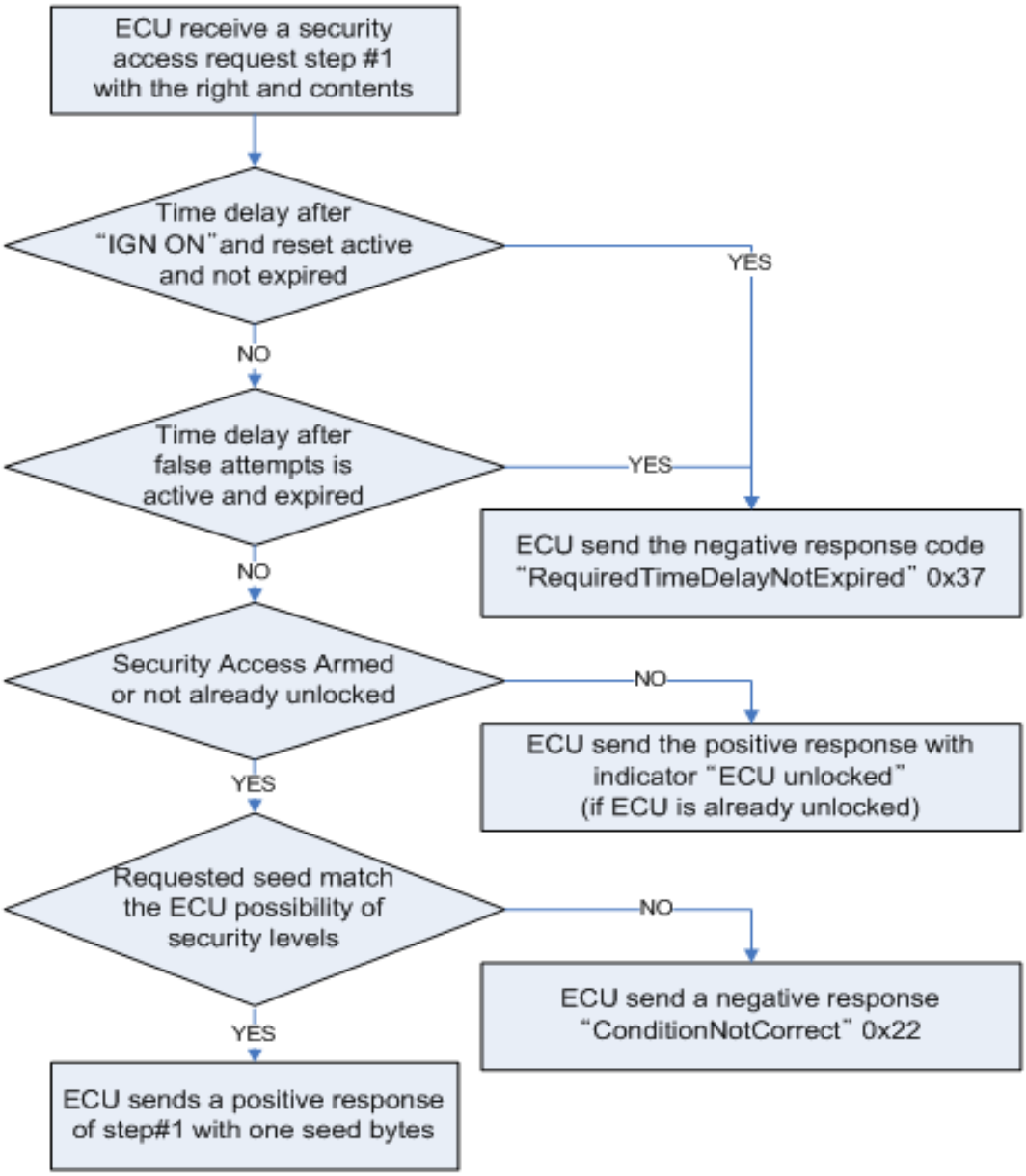

Figure 4-3. Flow chart of SecurityAccess service procedure STEP #1

MANDO specification (B)			
Specification name	**Diagnosis on CAN specification for MGH-80ABS/ESP**	Specification number	MES-A-KR-BE-002

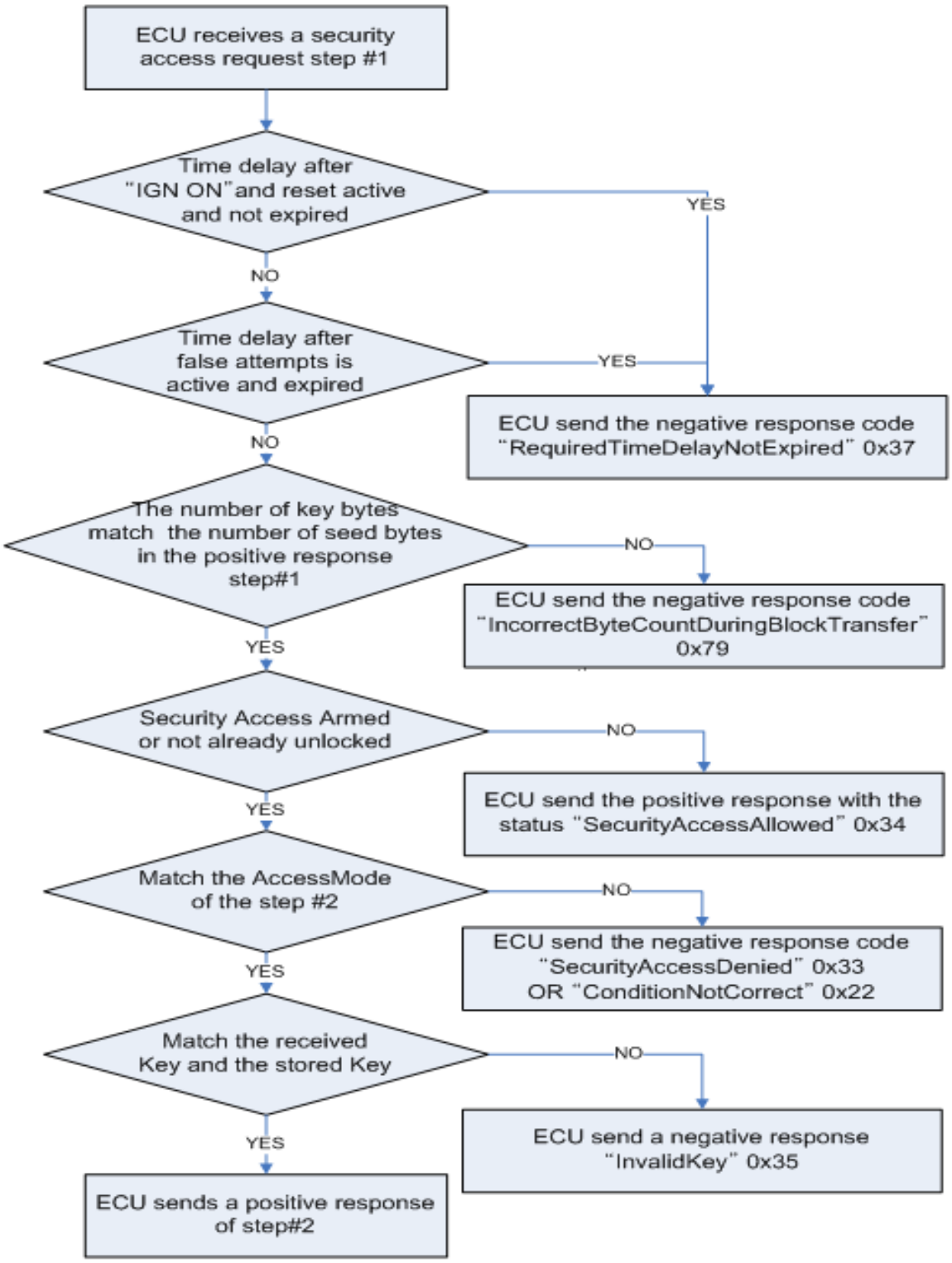

Figure 4-4. Flow chart of SecurityAccess service procedure STEP #2

4.7.2. SecurityAccess Step #1 service

- SecurityAccess request step #1

Data byte	Parameter name	Hex value	Mnemonic
#1d	SecurityAccess request #1 service ID	#27h	SA#1
#2d	AccessMode= RequestSeed	#01h	AM

Table 4-15. SecurityAccess request#1 message

- SecurityAccess step #1 positive response

Data byte	Parameter name	Hex value	Mnemonic
#1d	SecurityAccess positive response #1 service ID	#67h	SA#1PR
#2d	AccessMode=RequestSeed	#01h	AM
#3d #4d	seed#1 seed#2	#XXh #XXh	SEED

Table 4-16. SecurityAccess positive response#1 message

If seed = **#00h,#00h**, then SecurityAccess already permitted or not armed.

- SecurityAccess Step #1 negative Response

Data byte	Parameter name	Hex value	Mnemonic
#1d	NegativeResponse service ID	#7Fh	NR
#2d	SecurityAccess request service Id	#27h	SA
#3d	ResponseCode= [ConditionNotCorrect RequiredTimeDelayNotExpired IncorrectByteCountDuringBlockTransfer]	#XXh= [#22h #37h #79h]	RC

Table 4-17. SecurityAccess negative response#1 message

NegativeResponseCode	Cause of occurrence
ConditionsNotCorrect	Selected AM is not supported
RequiredTimeDelayNotExpired	Delay time after wrong access attempt (or reset) is not expired
IncorrectByteCountDuringBlockTransfer	Wrong DiagnosticService length

4.7.3. SecurityAccess step #2 service

- SecurityAccess request step #2

Data byte	Parameter name	Hex value	Mnemonic
#1d	SecurityAccess request#2 service ID	#27h	SA#2
#2d	AccessMode=SendKey	#02h	AM
#3d #4d	key#1 key#2	#XXh #XXh	KEY

Table 4-18. SecurityAccess request#2 message

- SecurityAccess step #2 positive response

Data byte	Parameter name	Hex value	Mnemonic
#1d	SecurityAccess positive response#2 service ID	#67h	SA#2PR
#2d	AccessMode=SendKey	#02h	AM
#3d	SecurityAccessStatus=[SecurityAccessAllowed]	#34h	SAA

Table 4-19. SecurityAccess positive response#2 message

- SecurityAccess step #2 negative response

Data byte	Parameter name	Hex value	Mnemonic
#1d	NegativeResponse dervice ID	#7Fh	NR
#2d	SecurityAccess request service ID	#27h	SA
#3d	ResponseCode= [ConditionNotCorrect SecurityAccessDenied/Required InvalidKey RequiredTimeDelayNotExpired IncorrectByteCountDuringBlockTransfer]	#XXh= [#22h #33h #35h #37h #79h]	RC

Table 4-20. SecurityAccess negative response#2 message

NegativeResponseCode	Cause of occurrence
ConditionsNotCorrect	Error in SecurityAccess Step #1
SecurityAccessDenied/Required	Wrong access mode selected
InvalidKey	Wrong KEY for the selected security level
RequiredTimeDelayNotExpired	Delay time after wrong access attempt (or reset) is not expired
IncorrectByteCountDuringBlockTransfer	Wrong DiagnosticService length

- The message flow during security access.

Time	Client (Tester)	Server (ECU)
S3 **P2**	SecurityAccess.Request#1[...]	SecurityAccess.PositiveResponse#1[...]
S3 **P2**	SecurityAccess.Request#2[...]	SecurityAccess.PositiveResponse#2[...]

Table 4-21. SecurityAccess message flow

4.7.4. SecurityAccess service – Security Levels

The following table gives the different supported security access levels.

Security Level	Used for
0	no security access necessary
1	General
3	System Supplier Specific

Table 4-22. Security levels

4.8. ECUReset service

4.8.1. ECUReset request

Data byte	Parameter name	Hex value	Mnemonic
#1d	ECUReset request service ID	#11h	ER
#2d	ResetMode = Power On Reset	#01h	RM

Table 4-23. ECUReset request message

4.8.2. ECUReset positive response

Data byte	Parameter name	Hex value	Mnemonic
#1d	ECUReset positive response ID	#51h	ERPR

Table 4-24. ECUReset positive response message

4.8.3. ECUReset negative Response

Data byte	Parameter name	Hex value	Mnemonic
#1d	NegativeResponse service ID	#7Fh	NR
#2d	ECUReset request service ID	#11h	ER
#3d	ResponseCode= [SubFunctionNotSupported-invalidFormat IncorrectByteCountDuringBlockTransfer]	#XXh= [#12h #79h]	RC

Table 4-25. ECUReset negative response message

NegativeResponseCode	Cause of occurrence
SubFunctionNotSupported-invalidFormat	Selected RM is not supported
IncorrectByteCountDuringBlockTransfer	Wrong DiagnosticService length
SecurityAccessDenied/Required	Not done SecurityAccess

4.8.4. ECUReset service – Reset mode

The below mentioned table gives the different reset modes supported by the project.

The project can update this table according to their requirement.

#2d	ResetMode= [PowerOn VehicleManufactuerSpecific SystemSupplierSpecific]	#XXh= [#01h #80-F9h #FAh-#FEh]	RM

Table 4-26. Different ResetModes

The different reset modes and their actions according to project.

In the existing generic implementation only PowerOn reset mode is supported.

ResetMode	Actions
PowerOn	Reset the ECU after sending the positive response
VehicleManufactuerSpecific	TBD
SystemSupplierSpecific	TBD

Table 4-27. Actions for different ResetModes

4.9. ReadEcuIdentification service

4.9.1. ReadEcuIdentification request

Data byte	Parameter name	Hex value	Mnemonic
#1d	ReadEcuIdentification request service ID	#1Ah	REI
#2d	IdentificationOption	#80h	IO

Table 4-28. ReadEcuIdentification request Message

4.9.2. ReadEcuIdentification positive response

Data byte	Parameter name	Hex value	Mnemonic
#1d	ReadEcuIdentification positive response service ID	#5Ah	REIPR
#2d	IdentificationOption	#80h	IO
#3d . . #nd	ECU Identification value #1 . . ECU Identification value #n (See Table 4-31)	#XXh . . #XXh	

Table 4-29. ReadEcuIdentification positive response message

4.9.3. ReadEcuIdentification negative response

Data byte	Parameter name	Hex value	Mnemonic
#1d	NegativeResponse Service Id	#7Fh	NR
#2d	readEcuIdentification Request Service Id	#1Ah	REI
#3d	ResponseCode= [SubFunctionNotSupported-invalidFormat IncorrectByteCountDuringBlockTransfer]	#XXh= [#12h #79h]	RC

Table 4-30. ReadEcuIdentification negative response message

NegativeResponseCode	Cause of occurrence
SubFunctionNotSupported-invalidFormat	Selected IO is not supported
IncorrectByteCountDuringBlockTransfer	Wrong DiagnosticService length

MANDO specification (B)

Specification name	**Diagnosis on CAN specification for MGH-80ABS/ESP**	Specification number	MES-A-KR-BE-002

Data Byte	Represent	Description	Remark		
#1	Vehicle name and Function (ASCII code)	0x??	First character of vehicle name		
#2		0x??	Second character of vehicle name		
#3		0x??	Blank : 0x20		
#4		0x??	A : 0x41	E : 0x45	H : 0x48
#5		0x??	B : 0x42	S : 0x53	E : 0x45
#6		0x??	S : 0x53	C : 0x43	V : 0x56
#7		0x??	Blank : 0x20		
#8		0x??	2 : 0x32	4 : 0x34	Or blank
#9		0x??	W : 0x57	W : 0x57	Or blank
#10		0x??	D : 0x44	D : 0x44	Or blank
#11		0x??	Blank : 0x20		
#12	ECU Version	H/W Version	Before mass production : A, B, C, D, … After mass production : 1,2,3,4,…		
#13		0x??	. : 0x2E		
#14		S/W Version**)	Before mass production : A, B, C, D, … After mass production : 1,2,3,4,…		
#15		0x??	Blank : 0x20		
#16		0x??	Blank : 0x20		
#17	Software Version	Sample type	Proto stage : X Pilot and mass-production stage : Elimination		
#18, #19		Vehicle code	Refer to next page.		
#20, #21		System code	Refer to next page.		
#22, #23		Control logic version	Start version No. = AA, AB, ….., AZ, BA,…		
#24, #25		Failsafe version	Start version No. = 1A, 2A, 2B, ….., 2Z, 3A,….		
#26, #27		Diagnosis version	Start version No. = 10, 11, …..,19, 1A,……		
#28		Sub-micom version	Start version No. = 0,~ 9, A ~ Z		
#29		0x2D('-')	-		
#30		Release date	Year (3 = 2003, 4 = 2004, …)		
#31		Release date	Month (1,2,....,9,A,B,C)		
#32, #33		Release date	Date(00,…,31)		

Table 4-31. ECU Identification Value List

**). S/W Version : This data is the version of Failsafe, Diagnosis S/W.

MANDO specification (B)

Specification name	**Diagnosis on CAN specification for MGH-80ABS/ESP**	Specification number	MES-A-KR-BE-002

- System code :

Items	Code
2WD + no EBD	1
2WD + EBD	2
4WD + no EBD	3
4WD + EBD	4
2WD/4WD + no EBD	5
2WD/4WD + EBD	6

Items	Code
ABS	A
ABS + TDWS	B
ABS + BTCS	C
ABS + BTCS + TDWS	D
ABS + FTCS	E
ABS + FTCS + TDWS	F
ABS + TCS + ESC	G
ABS + ESC + TDWS	H
ABS + ETCS	I
ABS + ARB	J

- Example of software version :

-. Proto :	L	M		A	B	S		2	W	D		A	.	B			X	B	1	2	A	A	A	1	A	1	0	2	-	8	3	1	0
-. Mass product :	L	M		E	S	C		4	W	D		1	.	2			B	1	4	G	A	A	1	A	1	0	-	2	-	8	3	1	0

4.10. Read IVSS softwareID service

4.10.1. ReadEcuIdentification request

Data byte	Parameter name	Hex value	Mnemonic
#1d	ReadEcuIdentification request service ID	#1Ah	REI
#2d	IdentificationOption	#81h	IO

Table 4-32. ReadEcuIdentification request Message

4.10.2. ReadEcuIdentification positive response

Data byte	Parameter name	Hex value	Mnemonic
#1d	ReadEcuIdentification positive response service ID	#5Ah	REIPR
#2d	IdentificationOption	#81h	IO
#3d . . #nd	IVSS Identification value #1 . . IVSS Identification value #n (See Table 4-35)	#XXh . . #XXh	

Table 4-33. ReadEcuIdentification positive response message

4.9.3. ReadEcuIdentification negative response

Data byte	Parameter name	Hex value	Mnemonic
#1d	NegativeResponse Service Id	#7Fh	NR
#2d	readEcuIdentification Request Service Id	#1Ah	REI
#3d	ResponseCode= [SubFunctionNotSupported-invalidFormat IncorrectByteCountDuringBlockTransfer]	#XXh= [#12h #79h]	RC

Table 4-34. ReadEcuIdentification negative response message

NegativeResponseCode	Cause of occurrence
SubFunctionNotSupported-invalidFormat	Selected IO is not supported
IncorrectByteCountDuringBlockTransfer	Wrong DiagnosticService length

MANDO specification (B)

Specification name	**Diagnosis on CAN specification for MGH-80ABS/ESP**	Specification number	MES-A-KR-BE-002

Data Byte	Represent	Description	Remark
#1	Vehicle name (ASCII code)	0x??	First character of vehicle name
#2		0x??	Second character of vehicle name
#3		0x20	Blank : 0x20
#4	DMIC	0x44	D : 0x44
#5		0x4D	M : 0x4D
#6		0x49	I : 0x49
#7		0x43	C : 0x43
#8		0x20	Blank : 0x20
#9	Driver Mode Version	0x??	Start version NO. = 0,~9, A~F
#10	.	0x2E	. : 0x2E
#11	IVSS Version	0x??	Emergency Steer Mode Version : Start version NO. = 0,~9, A~F
#12		0x??	Rough Road Mode Version : Start version NO. = 0,~9, A~F
#13		0x20	Blank : 0x20
#14	Release date	0x??	Year (Refer to next page)
#15		0x??	Month (Refer to next page)
#16		0x??	Day (Refer to next page)
#17	-	0x00	Reserved
#18	-	0x00	Reserved
#19	-	0x00	Reserved

Table 4-35. ECU Identification Value List

MANDO specification (B)

Specification name	**Diagnosis on CAN specification for MGH-80ABS/ESP**	Specification number	MES-A-KR-BE-002

- Year :

SYMBOL	W	X	Y	Z	A	B	C	D	E	F
YEAR	2011	2012	2013	2014	2015	2016	2017	2018	2019	2020
SYMBOL	G	H	J	K	L	M	N	P	R	S
YEAR	2021	2022	2023	2024	2025	2026	2027	2028	2029	2030

- Month :

SYMBOL	1	2	3	4	5	6	7	8	9	X	Y	Z
MONTH	1	2	3	4	5	6	7	8	9	10	11	12

- Day :

SYMBOL	1	2	3	4	5	6	7	8	9	A	
DAY	1	2	3	4	5	6	7	8	9	10	
SYMBOL	B	C	D	E	F	G	H	J	K	L	
DAY	11	12	13	14	15	16	17	18	19	20	
SYMBOL	M	N	P	R	S	T	V	W	X	Y	Z
DAY	21	22	23	24	25	26	27	28	29	30	31

- Example of HKMC DMIC software version :

-. IVSS ID	D	H		D	M	I	C		3	.	**A**	7		X	Z	9			

4.11. TesterPresent service

This service is used to indicate to a server (or servers) that a client (e.g. a tester) is still connected to the vehicle and that certain diagnostic services and/or communication that have been previously activated are to remain active.

This service is used to keep one or multiple servers in a diagnostic session other than the DefaultSession(Standard Diag. Mode).

This can either be done by transmitting the TesterPresent request message periodically or in case of absence of other diagnostic services to prevent the server(s) from automatically returning to the DefaultSession.

4.11.1. TesterPresent requset

Data byte	Parameter name	Hex value	Mnemonic
#1d	TesterPresent request service ID	#3Eh	TP
#2d	Sub-function = [ResponseRequired ResponseNotRequired]	#XXh [#00h #80h]	LEV_ ZSUBF

Table 4-36. TesterPresent request message

4.11.2. TesterPresent positive response

Data byte	Parameter name	Hex value	Mnemonic
#1d	TesterPresent service response service ID	#7Eh	TPPR
#2d	ZeroSubFunction (echo of the sub-function parameter)	#00h	ZSUBF

Table 4-37. TesterPresent positive response message

4.11.3. TesterPresent negative response

Data byte	Parameter name	Hex value	Mnemonic
#1d	NegativeResponse service ID	#7Fh	NR
#2d	TesterPresent request Service ID	#3Eh	TP
#3d	ResponseCode= [SubFunctionNotSupported IncorrectByteCountDuringBlockTransfer]	#XXh= [#12h #79h]	RC

Table 4-38. TesterPresent negative response message

NegativeResponseCode	Cause of occurrence
SubFunctionNotSupported	Selected sub-fuction is not supported
IncorrectByteCountDuringBlockTransfer	Wrong DiagnosticService length

5. Data transmission functions

5.1. ReadDataByLocalIdentifier service

5.1.1. ReadDataByLocalIdentifier request

Data Byte	Parameter Name	Hex Value	Mnemonic
#1d	ReadDataByLocalIdentifier request service ID	#21h	RDBLI
#2d	RecordLocalIdentifier = [Service Data Set_01 (Standard) Service Data Set_02 (Standard)]	#XXh= [#01h #02h]	RLI

Table 5-1. ReadDataByLocalIdentifier request message

5.1.2. ReadDataByLocalIdentifier positive Response

Data Byte	Parameter Name	Hex Value	Mnemonic
#1d	ReadDataByLocalIdentifier response service ID	#61h	RDBLIPR
#2d	RecordLocalIdentifier	#XXh	RLI
#3d . . . #nd	RecordValue#1 . . . RecordValue#n	#XXh . . . #XXh	RV

Table 5-2. ReadDataByLocalIdentifier positive response message

※ If the RecordValue of a PID is **#FFh or #FFFFh**, the PID is **NOT SUPPORTED**.

5.1.3. ReadDataByLocalIdentifier negative Response

Data Byte	Parameter Name	Hex Value	Mnemonic
#1d	NegativeResponse service ID	#7Fh	NR
#2d	ReadDataByLocalIdentifier request service ID	#21h	RDBLI
#3d	ResponseCode= [SubFunctionNotSupported-invalidFormat ConditionsNotCorrect IncorrectByteCountDuringBlockTransfer]	#XXh= [#12h #22h #79h]	RC

Table 5-3. ReadDataByLocalIdentifier negative response message

NegativeResponseCode	Cause of occurrence
SubFunctionNotSupported-invalidFormat	Selected RLI is not supported
ConditionsNotCorrect	DDLI buffer is empty, no DDLI is defined
IncorrectByteCountDuringBlockTransfer	Wrong DiagnosticService length

MANDO specification (B)

Specification name	**Diagnosis on CAN specification for MGH-80ABS/ESP**	Specification number	MES-A-KR-BE-002

Table 5-4. Standard service data set, Local Identifier = 0x01

Byte	PID	Data Type	Decription Text	Unit	Conversion
#0 #1 #2 #3	0x00	Supported PID	Supported PID : 0x01 ~ 0x20 Response : 4 Byte (A, B, C, D) Byte #0 : PID 0x01~0x08, Byte #1 : PID 0x09~0x10 Byte #2 : PID 0x11~0x18, Byte #3 : PID 0x19~0x20	Bit	-
#4 #5	0x01	P/T	Engine RPM (LOW) Engine RPM (High) (ESC Only)	RPM	xxxxh * 0.25
#6	0x02		Vehicle speed	KPH	xxh
#7	0x03		Throttle position sensor (ESC Only)	%	xxh * 100/255
#8	0x04		Shift level position (ESC & Automatic vehicle Only) [Bit 0 : P,N] / [Bit 1 : R] / [Bit 2 : D] / [Bit 3 : 4] [Bit 4 : 3] / [Bit 5 : 2] / [Bit 6 : L] / [Bit 7 : Sports]	Bit	-
#9	0x05	Battery	Battery voltage	V	xxh * 16/255
#10	0x06		5 Volt reference (G sensor installed system Only)	V	xxh * 6/255
#11	0x07	Wheel Speed	Wheel speed sensor – Front Left	KPH	xxh
#12	0x08		Wheel speed sensor – Front Right	KPH	xxh
#13	0x09		Wheel speed sensor – Rear Left	KPH	xxh
#14	0x0A		Wheel speed sensor – Rear Right	KPH	xxh
#15	0x0B	Sensor	Steering sensor (00=Low, 01=High, 11=Reserved) (ESC Only) Bit 1,0 : ST1 (STGA) Bit 2,3 : ST2 (STGB) Bit 5,4 : STN (STGZ)	Bit	-
#16	0x0C		G Sensor – Longituinal (G sensor installed system Only) Sensor range : -1.5g ~ 1.5g	g	(xxh-7Fh) * 4/255
#17	0x0D		G Sensor – Lateral (ESC Only)	g	Not supported
#18	0X0E	Lamp / Swtich	Lamp (00=Off, 01=On, 11=Reserved) Bit 1,0 : ABS warning lamp Bit 3,2 : EBD warning lamp Bit 5,4 : ESC function lamp (ESC Only) Bit 7,6 : ESC OFF lamp (ESC Only)	Bit	-
#19	0X0F		Switch (00=Off, 01=On, 11=Reserved) Bit 1,0 : ESC ON/OFF switch (ESC Only) Bit 3,2 : Brake light switch Bit 5,4 : Brake switch (ESC Only) Bit 7,6 : Hazard switch (Only for system applied ESS)	Bit	-

MANDO specification (B)

Specification name	Diagnosis on CAN specification for MGH-80ABS/ESP	Specification number	MES-A-KR-BE-002

Byte	PID	Data Type	Decription Text	Unit	Conversion
#20	0x10	Lamp / Swtich	Relay (00=Off, 01=On, 11=Reserved) Bit 1,0 : Motor Bit 3,2 : Valve Bit 4,5 : DBC Brake Lamp (Only for system applied DBC) Bit 7,6 : ESS Brake Lamp (Only for system applied ESS)	Bit	-
#21	0x11		Motor xxh : 00h=Off, 01h=On	-	-
#22	0x12	Valve	ABS inlet valve(00=Off, 01=On, 11=Reserved) Bit 1,0 : Front left Bit 3,2 : Front right Bit 5,4 : Rear left Bit 7,6 : Rear right	Bit	-
#23	0x13		ABS outlet valve (00=Off, 01=On, 11=Reserved) Bit 1,0 : Front left Bit 3,2 : Front right Bit 5,4 : Rear left Bit 7,6 : Rear right	Bit	-
#24	0x14		ESC valve (00=Off, 01=On, 11=Reserved) Bit 1,0 : Traction valve (TCL, ESC or HEV Only) Bit 3,2 : Traction valve (TCR, ESC or HEV Only) Bit 5,4 : Electric shuttle valve (ESV-L, ESC Only) Bit 7,6 : Electric shuttle valve (ESV-R, ESC Only)	Bit	-
#25	0x15		Bit 1,0 : USV1 Bit 3,2 : USV2 Bit 5,4 : HSV1 Bit 7,6 : HSV2	BIT	Not Supported
#26 #27	0x16	Sensor	Steering sensor – CAN type (High) Steering sensor – CAN type (Low) Sensor range : -780° ~ 780° (ESC Only)	°	(xxxxh - 8000h) / 10
#28 #29	0x17		Yaw /Lateral G sensor – Lateral G (High) Yaw /Lateral G sensor – Lateral G (Low) Sensor range : -1.5g ~ 1.5g (ESC Only)	g	(xxxxh - 0800h) / 630
#30 #31	0x18		Yaw /Lateral G sensor – Yaw (High) Yaw /Lateral G sensor – Yaw (Low) Sensor range : -75°/s ~ 75°/s (ESC Only)	°/s	(xxxxh - 0800h) / 16
#32 #33	0x19		Pressure sensor – Positive Pressure sensor – Negative Sensor range : 0bar ~ 200bar (ESC Only)	bar	xxh xxh

MANDO specification (B)

Specification name	**Diagnosis on CAN specification for MGH-80ABS/ESP**	Specification number	MES-A-KR-BE-002

Byte	PID	Data Type	Decription Text	Unit	Conversion
#34	0x1A	Sensor	Pedal travel sensor – PDT Sensor range : 0mm ~ 135mm (Only for system applied pedal travel sensor)	mm	xxh
#35	0x1B		Pedal travel sensor – PDF Sensor range : 0mm ~ 135mm (Only for system applied pedal travel sensor)	mm	xxh
#36	0x1C	Etc	DBC Lamp & Switch (Only for system applied DBC) Bit 3,2,1,0 : Lamp Status (0000=DBC Off, 0001=DBC Fault, 0010=DBC Ready, 0011=DBC Initial check, 0100=DBC ON, 1111=Reserved) Bit 5,4 : DBC switch (00=Off, 01=On, 11=Reserved) Bit 7,6 : Reserved (11)	-	-
#37 #38	0x1D	Sensor	Steering sensor – Relative type (High) Steering sensor – Relative type (Low) Sensor range : -800° ~ 800° (ESC Only)	°	(xxxxh-8000h)

MANDO specification (B)

Specification name	**Diagnosis on CAN specification for MGH-80ABS/ESP**	Specification number	MES-A-KR-BE-002

Table 5-5. Standard service data set, Local Identifier = 0x02

Byte	PID	Data Type	Decription Text	Unit	Conversion
#0 #1 #2 #3	0x00	Supported PID	Supported PID : 0x01 ~ 0x20 Response : 4 Byte (A, B, C, D) Byte #0 : PID 0x01~0x08, Byte #1 : PID 0x09~0x10 Byte #2 : PID 0x11~0x18, Byte #3 : PID 0x19~0x20	Bit	-
#4 #5 #6 #7	0x01	Sensor	Byte 0 : FL Wheel Pressure Sensor Byte 1 : FR Wheel Pressure Sensor Byte 2 : reserved (0xFF) Byte 3 : reserved (0xFF) Sensor range : 0bar ~ 200bar (Only for system applied Wheel pressure sensor)	bar	xxh xxh xxh xxh
#8 #9	0x02		Vacuum sensor (High) Vacuum sensor (Low) Sensor range : 0kpa ~ 100kpa (Only for system applied Vacuum sensor)	kpa	xxxxh / 10

5.2. ReadDiagnosticTroubleCodesByStatus service

5.2.1. ReadDiagnosticTroubleCodesByStatus request

Data Byte	Parameter Name	Hex Value	Mnemonic
#1d	ReadDiagnosticTroubleCodesByStatus request service ID	#18h	RDTCBS
#2d	StatusOfDTC	#00h	SODTC
#3d	GroupOfDiagnosticInformation (HighByte)	#40h	GODTC_HB
#4d	GroupOfDiagnosticInformation (LowByte)	#00h	GODTC_LB

Table 5-5. ReadDiagnosticTroubleCodesByStatus request message

5.2.2. ReadDiagnosticTroubleCodesByStatus positive Response

Data Byte	Parameter Name	Hex Value	Mnemonic
#1d	ReadDiagnosticTroubleCodesByStatus positive response service ID	#58h	RDTCBSPR
#2d	NumberOfDTC	#00h ~ #0Ah	NRODTC
	listOfDTCAndStatus= [	 [	LODTCAS
#3d	DTC#1d	#XXh	
#4d	DTC#1d	#XXh	
#5d	SatusOfDTC#1d	#XXh	
#6d	DTC#2d	#XXh	
#7d	DTC#2d	#XXh	
#8d	SatusOfDTC#2d	#XXh	
.	.	.	
.	.	.	
.	.	.	
#30d	DTC#10d	#XXh	
#31d	DTC#10d	#XXh	
#32d	SatusOfDTC#10d	#XXh	
	]	]	

Table 5-6. ReadDiagnosticTroubleCodesByStatus positive response message

***. StatusOfDTC : See 5.2.4.

5.2.3. ReadDiagnosticTroubleCodesByStatus negative Response

Data Byte	Parameter Name	Hex Value	Mnemonic
#1d	NegativeResponse service ID	#7Fh	NR
#2d	ReadDiagnosticTroubleCodesByStatus request service ID	#18h	RDTCBS
#3d	ResponseCode= [SubFunctionNotSupported-invalidFormat RequestOutOfRange IncorrectByteCountDuringBlockTransfer]	#XXh= [#12h #31h #79h]	RC

Table 5-7. ReadDiagnosticTroubleCodesByStatus negative response message

NegativeResponseCode	Cause of occurrence
SubFunctionNotSupported-invalidFormat	- Selected SODTC is not supported - Selected DTC is no GODTC supported
RequestOutOfRange	Selected GODTC is not supported
IncorrectByteCountDuringBlockTransfer	Wrong DiagnosticService length

5.2.4. StatusOfDTC (One byte)

Data bit	Binary value	Meaning
3,2,1,0	xxxxb	**DTCFaultSymptom** 0000b = “No fault symptom available for this DTC 0001b = “Above maximum threshold 0010b = “ Below minimum threshold” 0100b = “No signal” 1000b = “Invalid signal” 0011b = “Reserved” 0101b = “Reserved” 0110b = “Reserved” 0111b = “Reserved” 1001b = “Reserved” 1010b = “Reserved” 1011b = “Reserved” 1100b = “Reserved” 1101b = “Reserved” 1110b = “Reserved” 1111b = “Reserved”
4	xb	**DTCReadinessFlag** 0b = Test complete for this DTC 1b = Test NOT complete for this DTC
6,5	xxb	**DTCStorageState – Storage state of the error path:** 00b = No DTC detected at time of request 01b = Error path is stored in the FCM but currently not defective 10b = DTC Maturing – Intermittent at time of request 11b = Error path is stored in the FCM and currently defective
7	xb	**DTCWarningLampCalibrationStatus indicates whether the MIL (malfunction indicator lamp) is controlled by the path entered:** 0b = Error path is not controlling the MIL 1b = Error path is controlling the MIL

5.3. ClearDiagnosticInformation service

With the diagnostic communication service “ClearDiagnosticInformation”, it is possible to clear all DTCs.

5.3.1. ClearDiagnosticInformation request

Data Byte	Parameter Name	Hex Value	Mnemonic
#1d	ClearDiagnosticInformation request service ID	#14h	CDI
#2d	GroupOfDiagnosticInformation (HighByte)	#40h	GODI_HB
#3d	GroupOfDiagnosticInformation (LowByte)	#00h	GODI_LB

Table 5-8. ClearDiagnosticInformation request message

5.3.2. ClearDiagnosticInformation positive response

Data Byte	Parameter Name	Hex Value	Mnemonic
#1d	ClearDiagnosticInformation positive response service ID	#54h	CDIPR
#2d	GroupOfDiagnosticInformation (HighByte)	#40h	GODI_HB
#3d	GroupOfDiagnosticInformation (LowByte)	#00h	GODI_LB

Table 5-9. ClearDiagnosticInformation positive response message

5.3.3. ClearDiagnosticInformation negative response

Data Byte	Parameter Name	Hex Value	Mnemonic
#1d	NegativeResponse service ID	#7Fh	NACK
#2d	ClearDiagnosticInformation request service ID	#14h	CLRDTC
#3d	ResponseCode= [RequestOutOfRange IncorrectByteCountDuringBlockTransfer]	#XXh= [#22h #79h]	RC

Table 5-10. ClearDiagnosticInformation negative response message

NegativeResponseCode	Cause of occurrence
RequestOutOfRange	Selected GODI is not supported
IncorrectByteCountDuringBlockTransfer	Wrong DiagnosticService length

5.4. WriteDataByLocalIdentifier service

5.4.1. Write system variant (ESC & Variant coding system Only)

This service enable to write the variant. Normally the variant has been calculated by the CAN component and automatically written into the EEPROM. This service allows us to force the variant in the EEPROM.

5.4.1.1. WriteDataByLocalIdentifier request

Data Byte	Parameter Name	Hex Value	Mnemonic
#1d	WriteDataByLocalIdentifier request service ID	#3B	WDBLI
#2d	RoutineLocalIdentifier	#04h	RLI
#3d	Variant to be written	#FFh	RV

Table 5-11. WriteDataByLocalIdentifier request message

5.4.1.2. WriteDataByLocalIdentifier positive response

Data Byte	Parameter Name	Hex Value	Mnemonic
#1d	WriteDataByLocalIdentifier positive response service ID	#7Bh	WDBLIPR
#2d	RoutineLocalIdentifier	#04h	RLI

Table 5-12. WriteDataByLocalIdentifier positive response message

5.4.1.3. WriteDataByLocalIdentifier negative response

Data Byte	Parameter Name	Hex Value	Mnemonic
#1d	NegativeResponse service ID	#7Fh	NACK
#2d	WriteDataByLocalIdentifier request service ID	#3Bh	WDBLI
#3d	ResponseCode= [SubFunctionNotSupported-invalidFormat ConditionsNotCorrected IncorrectByteCountDuringBlockTransfer requestCorrectlyReceived-ResponsePending]	#XXh= [#12h #22h #79h #78h]	RC

Table 5-13. WriteDataByLocalIdentifier negative response message

NegativeResponseCode	Cause of occurrence
SubFunctionNotSupported-invalidFormat	Selected RLI and RV is not supported
ConditionsNotCorrected	1) IGN OFF 2) Under Disable Normal Communication ($28) service 3) System voltage < 9V or System voltage > 16V
IncorrectByteCountDuringBlockTransfer	Wrong DiagnosticService length
requestCorrectlyReceived -ResponsePending C1)	If the executing time is exceeding P2max, the ECU will send a negative response 78H.

***. C1) : If the tester receives the negative response 78H, the tester should wait for the allowable maximum time. (recommended value : 5000ms)

5.4.2. Write In-Line Coding service

This service enable to write the variant into the EEPROM by user's choice.

5.4.2.1. WriteDataByLocalIdentifier request (In-Line Coding)

Data Byte	Parameter Name	Hex Value	Mnemonic
#1d	WriteDataByLocalIdentifier request service ID	#3Bh	WDBLI
#2d	RoutineLocalIdentifier = EOL configuration	#E0h	RLI
#3d	recordValue#1 (1 byte, HEX)	#xxh	RV1
#4d	recordValue#2 (1 byte, HEX)	#xxh	RV2
#5d	recordValue#3 (1 byte, HEX) – reserved	#xxh	RV3
#6d	recordValue#4 (1 byte, HEX) – reserved	#xxh	RV4
#7d	recordValue#5 (1 byte, HEX) – reserved	#xxh	RV5

Table 5-14. WriteDataByLocalIdentifier request message

recordValue#1 (#xxh) definition

Bit	Function	Conversion	Remark
1, 0	ESS	00b : Don't care 01b : Don't care **10b : Disable ESS** **11b : Enable ESS**	
3, 2	HAC	00b : Don't care 01b : Don't care **10b : Disable HAC** **11b : Enable HAC**	
5, 4	SPAS	00b : Don't care 01b : Don't care **10b : Active Wheel Sensor** **11b : Smart Wheel Sensor**	
7, 6	AVH	00b : Don't care 01b : Don't care **10b : Disable AVH** **11b : Enable AVH**	

recordValue#2 (#xxh) definition

Bit	Function	Conversion	Remark
1, 0	EPB Dynamic Braking	00b : Don't care 01b : Don't care **10b : Disable EPB Dynamic Braking** **11b : Enable EPB Dynamic Braking**	
3, 2	reserved		
5, 4	reserved		
7, 6	reserved		

5.4.2.2. WriteDataByLocalIdentifier positive response

Data Byte	Parameter Name	Hex Value	Mnemonic
#1d	WriteDataByLocalIdentifier positive response service ID	#7Bh	WDBLIPR
#2d	RoutineLocalIdentifier = EOL configuration	#E0h	RLI

Table 5-15. WriteDataByLocalIdentifier positive response message

5.4.2.3. WriteDataByLocalIdentifier negative response

Data Byte	Parameter Name	Hex Value	Mnemonic
#1d	NegativeResponse service ID	#7Fh	NACK
#2d	WriteDataByLocalIdentifier request service ID	#3Bh	WDBLI
#3d	ResponseCode= [SubFunctionNotSupported-invalidFormat ConditionsNotCorrected IncorrectByteCountDuringBlockTransfer requestCorrectlyReceived-ResponsePending]	#XXh= [#12h #22h #79h #78h]	RC

Table 5-16. WriteDataByLocalIdentifier negative response message

NegativeResponseCode	Cause of occurrence
SubFunctionNotSupported-invalidFormat	Selected RLI is not supported
ConditionsNotCorrected	Service not completed by ESC over 5sec.
IncorrectByteCountDuringBlockTransfer	Wrong DiagnosticService length
requestCorrectlyReceived -ResponsePending C1)	If the executing time is exceeding P2max, the ECU will send a negative response 78H.

***. C1) : If the tester receives the negative response 78H, the tester should wait for the allowable maximum time. (recommended value : 5000ms)

5.4.3. Read In-Line Coding service

5.4.3.1. ReadEcuIdentification request (In-Line Coding)

Data Byte	Parameter Name	Hex Value	Mnemonic
#1d	ReadEcuIdentification request service ID	#1Ah	REI
#2d	RoutineLocalIdentifier = EOL configuration	#E0h	RLI

Table 5-17. ReadEcuIdentification request message

5.4.3.2. ReadEcuIdentification positive response

Data Byte	Parameter Name	Hex Value	Mnemonic
#1d	ReadEcuIdentification request service ID	#5Ah	REIPR
#2d	RoutineLocalIdentifier = EOL configuration	#E0h	RLI
#3d	recordValue#1 (1 byte, HEX)	#xxh	RV1
#4d	recordValue#2 (1 byte, HEX)	#00h	RV2
#5d	recordValue#3 (1 byte, HEX) – reserved	#00h	RV3
#6d	recordValue#4 (1 byte, HEX) – reserved	#00h	RV4
#7d	recordValue#5 (1 byte, HEX) – reserved	#00h	RV5

Table 5-18. ReadEcuIdentification positive response message

recordValue#1 (#xxh) definition

Bit	Function	Conversion	Remark
1, 0	ESS	00b : In-line coding not applied 01b : In-line coding not completed 10b : In-line coding completed – Disabled ESS 11b : In-line coding completed – Enabled ESS	
3, 2	HAC	00b : In-line coding not applied 01b : In-line coding not completed 10b : In-line coding completed – Disabled HAC 11b : In-line coding completed – Enabled HAC	
5, 4	SPAS	00b : In-line coding not applied 01b : In-line coding not completed 10b : In-line coding completed – Active Wheel sensor 11b : In-line coding completed – Smart Wheel sensor	
7, 6	AVH	00b : In-line coding not applied 01b : In-line coding not completed 10b : In-line coding completed – Disabled AVH 11b : In-line coding completed – Enabled AVH	

.

recordValue#2 (#xxh) definition

Bit	Function	Conversion	Remark
1, 0	EPB Dynamic Braking	00b : In-line coding not applied 01b : In-line coding not completed 10b : In-line coding completed – Disabled EPB D/Braking 11b : In-line coding completed – Enabled EPB D/Braking	
3, 2	reserved	-	
5, 4	reserved	-	
7, 6	reserved	-	

5.4.2.3. ReadEcuIdentification negative response

Data Byte	Parameter Name	Hex Value	Mnemonic
#1d	NegativeResponse service ID	#7Fh	NACK
#2d	ReadEcuIdentification request service ID	#1Ah	REI
#3d	ResponseCode= [SubFunctionNotSupported-invalidFormat IncorrectByteCountDuringBlockTransfer]	#XXh= [#12h #79h]	RC

Table 5-16. WriteDataByLocalIdentifier negative response message

NegativeResponseCode	Cause of occurrence
SubFunctionNotSupported-invalidFormat	Selected RLI is not supported
IncorrectByteCountDuringBlockTransfer	Wrong DiagnosticService length

6. Input output control functions

6.1. InputOutputControlByLocalIdentifier service (Single)

6.1.1. InputOutputControlByLocalIdentifier request

Data Byte	Parameter Name	Hex Value	Mnemonic
#1d	InputOutputControlByLocalIdentifier request service ID	#30h	IOCBLID
#2d	InputOutputLocalIdentifier	#XXh	IOLID
#3d	ControlOption= [InputOutputControlParameter]	#XXh	CO_... IOCP_..

Table 6-1. InputOutputControlByLocalIdentifier request message

※ The tester sends the controlOption with Start control, the valve or the motor is activated for 2 seconds. (Table 6-4. Standard I/O Control Data)

※ If the tester sends the controlOption with Stop control while output control is in progress, ECU stops all actuators' actuation at once.

※ If tester sends the controlOption with Start control while output control is in progress, ECU stops all actuators' actuation at once and then the specified actuators is newly activated for 2 seconds.

※ Engine State during Control : IGN switch On & Engine Not Running or Engine Running & Idle.

※ InputOutputControlParameter : 00h (ON or Start) / 11h (OFF or Stop)

6.1.2. InputOutputControlByLocalIdentifier positive response

Data Byte	Parameter Name	Hex Value	Mnemonic
#1d	InputOutputControlByLocalIdentifier positive response service ID	#70h	IOCBLIDPR
#2d	InputOutputLocalIdentifier	#XXh	IOLID
#3d	ControlOption= [ControlState]	#XXh	CO_... CS_..

Table 6-2. InputOutputControlByLocalIdentifier positive response message

※ InputOutputControlParameter (IOCP) 00h (ON or Start)
11h (OFF or Stop)

※ ControlState(CS) 00h (Driving Failure)
01h (Driving Success)

6.1.3. InputOutputControlByLocalIdentifier positive response (Supported PID)

Data Byte	Parameter Name	Hex Value	Mnemonic
#1d	InputOutputControlByLocalIdentifier positive response service ID	#70h	IOCBLIDPR
#2d	InputOutputLocalIdentifier	#00h	IOLID
#3d #4d #5d #6d	Supported PID #1 Supported PID #2 Supported PID #3 Supported PID #4	#XXh #XXh #XXh #XXh	

6.1.4. InputOutputControlByLocalIdentifier negative response

Data Byte	Parameter Name	Hex Value	Mnemonic
#1d	NegativeResponse service ID	#7Fh	NR
#2d	InputOutputControlByLocalIdentifier request service ID	#30h	IOBLID
#3d	ResponseCode= [SubFunctionNotSupported-invalidFormat ConditionNotCorrect RequestOutOfRange IncorrectByteCountDuringBlockTransfer]	#XXh= [#12h #22h #31h #79h]	RC

Table 6-3. InputOutputControlByLocalIdentifier negative response message

NegativeResponseCode	Cause of occurrence
SubFunctionNotSupported-invalidFormat	InputOutputControlParamter not supported
ConditionsNotCorrect	The conditions for performing a request are not correct
RequestOutOfRange	InputOutputIdentifier not supported (but InputOutputControlParamter supported)
IncorrectByteCountDuringBlockTransfer	InputOutputIdentifier and InputOutputControlParamter supported but length of request is invalid.

MANDO specification (B)

Specification name	**Diagnosis on CAN specification for MGH-80ABS/ESP**	Specification number	MES-A-KR-BE-002

Description	LID	Control Parameter	Supported Request	Action
Supported PID : 0x01~0x1F Response : 4 Byte (A,B,C,D)	00h	00h	None	Response 4Byte Data Where: 1 = Supported PID 0 = Not supported
Motor	01h	00h, 11h	None	00h : Start 11h : Stop
Front Left Valve (Input)	02h	↑	↑	00h : Valve ON 11h : Valve OFF
Front Right Valve (Input)	03h	↑	↑	↑
Rear Left Valve (Input)	04h	↑	↑	↑
Rear Right Valve (Input)	05h	↑	↑	↑
Front Left Valve (Output)	06h	↑	↑	↑
Front Right Valve (Output)	07h	↑	↑	↑
Rear Left Valve (Output)	08h	↑	↑	↑
Rear Right Valve (Output)	09h	↑	↑	↑
TCS Front Left Valve : TCL (ESC or HEV only)	0Ah	↑	↑	↑
TCS Front Right Valve : TCR (ESC or HEV only)	0Bh	↑	↑	↑
Electric Shuttle Valve : ESV-R (ESC only)	0Eh	↑	↑	↑
Electric Shuttle Valve : ESV-L (ESC only)	0Fh	↑	↑	↑
DBC Brake Lamp Relay (Only for System applied DBC)	11h	↑	↑	00h : Start 11h : Stop
ESS Brake Lamp Relay (Only for System applied ESS)	12h	↑	↑	00h : Start 11h : Stop

Table 6-4. Standard I/O Control Data, Local Identifier = 0x00~0x1F

6.2. InputOutputControlByLocalIdentifier service (Multiple)

6.2.1. InputOutputControlByLocalIdentifier Request

Data Byte	Parameter Name	Hex Value	Mnemonic
#1d	InputOutputControlByLocalIdentifier request service ID	#30h	IOCBLID
#2d	InputOutputLocalIdentifier	#F0h	IOLID
#3d	ControlOption= [InputOutputControlParameter]	#XXh	CO_... IOCP_...
#4d	Output Control Group#1 to be commanded (states)	#XXh	OCG#1
#5d	Output Control Group#2 to be commanded (states)	#XXh	OCG#2
#6d	Activation time	#XXh	AT

Table 6-5. InputOutputControlByLocalIdentifier request message

※ Engine State during Control : IGN switch On & Engine Not Running or Engine Running & Idle.

※ Concerning the activation time, one bit corresponds to 10msec, that's mean the activation time is included between 10msec and 2550msec.

※ The tester sends the ControlOption with Start control, the actuators are configured in their states. And after the activation time, the actuators are placed in their OFF states.

※ If the tester sends the ControlOption with Stop control while output control is in progress, the all actuators are placed in their OFF states at once.

※ If tester sends the ControlOption with Start control while output control is in progress, ECU stops all valves and the motor actuation at once and then the actuators are configured in their new states. And after the new activation time, the actuators are placed in their OFF states.

※ InputOutputControlParameter : 00h (ON or Start) / 11h (OFF or Stop)

Bit	Output Control Group#1	Output Control Group#2
Bit 0	Front left valve (IN)	Motor
Bit 1	Front right valve (IN)	TCS front left valve : Traction valve (TCL) (ESC or HEV only)
Bit 2	Rear left valve (IN) (3 Channel : Rear valve IN)	TCS front right valve : Traction valve (TCR) (ESC or HEV only)
Bit 3	Rear right valve (IN) (3 Channel : not supported)	Electric shuttle valve : ESV-R (ESC Only)
Bit 4	Front left valve (OUT)	Electric shuttle valve : ESV-L (ESC only)
Bit 5	Front right valve (OUT)	Reserved
Bit 6	Rear left valve (OUT) (3 Channel : Rear valve OUT)	Reserved
Bit 7	Rear right valve (OUT) (3 Channel : not supported)	Reserved

Table 6-6. List of the Output Group#1, #2

6.2.2. InputOutputControlByLocalIdentifier positive Response

Data Byte	Parameter Name	Hex Value	Mnemonic
#1d	InputOutputControlByLocalIdentifier positive response service ID	#70h	IOCBLIDPR
#2d	inputOutputLocalIdentifier	#F0h	IOLID
#3d	ControlOption= [ControlState]	#XXh	CO_... CS_...

Table 6-7. InputOutputControlByLocalIdentifier positive response message

※ InputOutputControlParameter (IOCP) 00h (ON or Start)
11h (OFF or Stop)

※ ControlState(CS) 00h (Driving Failure)
01h (Driving Success)

6.2.3. InputOutputControlByLocalIdentifier negative response

Data Byte	Parameter Name	Hex Value	Mnemonic
#1d	NegativeResponse Service ID	#7Fh	NR
#2d	InputOutputControlByLocalIdentifier request service ID	#30h	IOBLID
#3d	ResponseCode= [SubFunctionNotSupported-invalidFormat ConditionNotCorrect RequestOutOfRange IncorrectByteCountDuringBlockTransfer]	#XXh= [#12h #22h, #31h #79h]	RC

Table 6-8. InputOutputControlByLocalIdentifier negative response message

NegativeResponseCode	Cause of occurrence
SubFunctionNotSupported-invalidFormat	InputOutputControlParamter not supported
ConditionsNotCorrect	The conditions for performing a request are not correct
RequestOutOfRange	InputOutputIdentifier not supported (but InputOutputControlParamter supported)
IncorrectByteCountDuringBlockTransfer	InputOutputIdentifier and InputOutputControlParamter supported but length of request is invalid.

7. Remote activation of routine functions

7.1. StartRoutineByLocalIdentifer service

7.1.1. StartRoutineByLocalIdentifier Request (Can type steering sensor (de)calibration)

Data Byte	Parameter Name	Hex Value	Mnemonic
#1d	StartRoutineByLocalIdentifier request service ID	#31h	STRBLI
#2d	RoutineLocalIdentifier	#01h	RELI_
#3d	Start the action	#00h	
#4d	RoutineControlIdentifer= [De-calibration (Reset) Calibration]	 #00h #FFh	

Table 7-1. StartRoutineByLocalIdentifier request message

7.1.2. StartRoutineByLocalIdentifier positive response

Data Byte	Parameter Name	Hex Value	Mnemonic
#1d	StartRoutineByLocalIdentifier positive response service ID	#71h	STRBLIPR
#2d	RoutineLocalIdentifier	#01h	RELI_
#3d	Status= [Failure in (De)Calibration (De)Calibration completed and OK]	 #00h #02h	

Table 7-2. StartRoutineByLocalIdentifier positive response message

7.1.3. StartRoutineByLocalIdentifier negative response

Data Byte	Parameter Name	Hex Value	Mnemonic
#1d	NegativeResponse Service ID	#7Fh	NR
#2d	StartRoutineByLocalIdentifier request service ID	#31h	IOBLID
#3d	ResponseCode= [SubFunctionNotSupported-invalidFormat ConditionNotCorrect IncorrectByteCountDuringBlockTransfer requestCorrectlyReceived-ResponsePending]	#XXh= [#12h #22h, #79h #78h]	RC

Table 7-3. StartRoutineByLocalIdentifier negative response message

NegativeResponseCode	Cause of occurrence
SubFunctionNotSupported-invalidFormat	RoutineLocalIdentifier or RoutineControlIdentifer not supported
ConditionsNotCorrect	The conditions for performing a request are not correct 1) IGN OFF 2) Under Disable Normal Communication ($28) service 3) System voltage < 9V or System voltage > 16V
IncorrectByteCountDuringBlockTransfer	Wrong DiagnosticService length
requestCorrectlyReceived -ResponsePending C1)	If the executing time is exceeding P2max, the ECU will send a negative response 78H.

***. C1) : If the tester receives the negative response 78H, the tester should wait for the allowable maximum time. (recommended value : 5000ms)

The other system except MANDO ABS/ESC may send a negative response 21H.

7.2.1. StartRoutineByLocalIdentifier Request (Longitudinal G sensor calibration)

Data Byte	Parameter Name	Hex Value	Mnemonic
#1d	StartRoutineByLocalIdentifier request service ID	#31h	STRBLI
#2d	RoutineLocalIdentifier	#03h	RELI_
#3d	Start the action	#00h	
#4d	RoutineControlIdentifer= [Calibration]	#FFh	

Table 7-4. StartRoutineByLocalIdentifier request message

※ This request is used for the longitudinal G sensor calibration of ESC system.

If the ECU receives this calibration request, the ECU writes offset value of zero point to EEPROM. So this request is sent to the ECU only when the vehicle is static condition.

※ Static condition :

1. Vehicle stop.
2. Keep grand level.

7.2.2. StartRoutineByLocalIdentifier positive response (Longitudinal G sensor calibration)

Data Byte	Parameter Name	Hex Value	Mnemonic
#1d	StartRoutineByLocalIdentifier positive response service ID	#71h	STRBLIPR
#2d	RoutineLocalIdentifier	#03h	RELI_
#3d	Status= [Failure In Progress Success]	 #00h #01h #02h	

Table 7-5. StartRoutineByLocalIdentifier positive response message

※ If the executing time is exceeding 50ms, the ECU will send a positive response with the status information “In Progress”, During the execution of the routine, the tester has to ask for the results till the routine is finished and answers with status “Success or Failure”.

※ The cases of ” Failure” status :

1. The fault of longitudinal G sensor detected.
2. The calculated sensor offset value exceeds the specified offset value.
3. The calculation time exceeds 5seconds. (e.g., The EEPROM failure has occurred)

7.2.3. StartRoutineByLocalIdentifier negative response (Longitudinal G sensor calibration)

Data Byte	Parameter Name	Hex Value	Mnemonic
#1d	NegativeResponse Service ID	#7Fh	NR
#2d	StartRoutineByLocalIdentifier request service ID	#31h	IOBLID
#3d	ResponseCode= [SubFunctionNotSupported-invalidFormat ConditionNotCorrect RequestOutOfRange IncorrectByteCountDuringBlockTransfer]	#XXh= [#12h #22h, #31h #79h]	RC

Table 7-6. StartRoutineByLocalIdentifier negative response message

NegativeResponseCode	Cause of occurrence
SubFunctionNotSupported-invalidFormat	“RoutineLocalIdentifier” not supported
ConditionsNotCorrect	The conditions for performing a request are not correct : 1) Max Wheel Speed ≥ 30KPH. 2) IGN OFF 3) Under Disable Normal Communication ($28) service 4) System voltage < 9V or System voltage > 16V
RequestOutOfRange	“Start the action” or “RoutineControlIdentifer” not supported
IncorrectByteCountDuringBlockTransfer	Wrong DiagnosticService length

MANDO specification (B)

Specification name	Diagnosis on CAN specification for MGH-80 ABS/ESP	Specification number	MES-A-KR-BE-002

8. Diagnostic Trouble Codes (Diagnostic trouble codes ※C1 = 5H, C2 = 6H)

DTC	Trouble description	System
C1 101	Battery voltage high	ALL
C1 102	Battery voltage low	
C1 113	5V Sensor power voltage	Analog G or Vacuum or Pedal sensor installed system
C1 114	12V Sensor power voltage	ESC
C1 200	Wheel speed sensor front-LH open/short	ALL
C1 201	Wheel speed sensor front-LH range / performance / intermittent	
C1 202	Wheel speed sensor front-LH invalid/no signal	
C1 203	Wheel speed sensor front-RH open/short	
C1 204	Wheel speed sensor front-RH range / performance / intermittent	
C1 205	Wheel speed sensor front-RH invalid/no signal	
C1 206	Wheel speed sensor rear-LH open/short	
C1 207	Wheel speed sensor rear-LH range / performance / intermittent	
C1 208	Wheel speed sensor rear-LH invalid/no signal	
C1 209	Wheel speed sensor rear-RH open/short	
C1 210	Wheel speed sensor rear-RH range / performance / intermittent	
C1 211	Wheel speed sensor rear-RH invalid/no signal	
C1 235	Primary pressure sensor – electrical	ESC
C1 237	Primary pressure sensor – signal	
C1 259	Steering sensor – electrical	ESC
C1 623	CAN time-out SAS	
C1 260	Steering sensor circuit – signal	
C1 261	Steering sensor Calibration Error	
C1 274	G sensor error	G sensor installed system
C1 275	G Sensor Range/Performance error	
C1 285	G sensor Calibration Error	Only for the system applied HAC
C1 282	Yaw rate & lateral G sensor – electrical	ESC
C1 283	Yaw rate & lateral G sensor – signal (Yaw&G Sensor Type)	
C1 286	Yaw rate & lateral G sensor – signal (ACU Type)	
C1 378	Pedal travel sensor – electrical	Only for the system applied pedal travel sensor
C1 379	Pedal travel sensor – signal	
C2 126	Vacuum Pump Relay Drive Pin Open/Short	Only for the system applied vacuum pump
C2 231	Vacuum Pump System Fail	
C1 503	TCS/ESC switch error	ESC
C1 526	HDC switch error	Only for the system applied DBC
C1 358	AVH switch error	Only for the system applied AVH

MANDO specification (B)

Specification name	**Diagnosis on CAN specification for MGH-80 ABS/ESP**	Specification number	MES-A-KR-BE-002

DTC	Trouble description	System
C1 513	Brake switch error	ESC
C1 604	ECU hardware error	ALL
C2 112	Valve relay error	ALL
C2 227	Excessive temperature of brake disc	ESC
C2 380	ABS/TCS/ESC valve error	ALL
C2 402	Motor electrical	ALL
C1 611	CAN time-out EMS	ABS with EDC or ESC
C1 612	CAN time-out TCU	
C1 613	CAN wrong message	
C1 616	CAN bus off(Single CAN Only)	
C1 627	CAN time-out 4WD	4WD vehicle
C2 222	CAN signal error 4WD	
C1 702	Variant coding error	Variant Coding System
C2 130	DBC Brake lamp relay error	Only for the system applied DBC or HAC
C2 131	ESS Brake lamp relay error	Only for the system applied ESS
C1 527	Gear R switch Open/Short	Only for the system applied DBC and Manual Transmission
C1 520	Clutch switch Open/Short	
C1 614	CAN time-out HCU/VCU/FCU	HEV
C1 687	CAN time-out VSM	Only for the system applied VSM
C1 688	Invalid CAN data VSM	
C1 800	CAN time-out AHB	Only for the system applied AHB
C1 651	CAN time-out EPB	Only for the system applied AVH
C1 652	Invalid CAN data EPB	
C1 628	CAN time-out CLU2	Only for the system applied AVH and Manual Transmission
C1 656	CAN signal error Cluster	
C1 385	Vacuum Sensor-Electrical	Only for the system applied Vacuum Sensor
C1 386	Vacuum Sensor-Signal	

MANDO specification (B)

Specification name	**Diagnosis on CAN specification for MGH-80 ABS/ESP**	Specification number	MES-A-KR-BE-002

DTC	Trouble description	System
C1 638	CAN time-out SCC	Only for the system applied SCC/AEB
C1 650	Invalid CAN data SCC	
C1 649	Invalid CAN data EMS5	Only for the system applied SCC
C1 648	Invalid CAN data EMS(Engine RPM Signal Fail)	ABS with EDC or ESC
C2 229	Invalid CAN data EMS(Actuator Failure)	
C2 228	Invalid CAN data TCU(Actuator Failure)	
C2 243	Invalid CAN data TCU(Gear Fault)	
C1 60E	P-CAN BUS OFF	Only for Dual CAN system
C1 616	C-CAN BUS OFF	
C1 812	CAN time-out Gateway	
C1 817	CAN Signal Error Buckle CGW	
C1 62A	CAN time-out CLU13	DMIC system only